Operation Manual

EOC06 Series

Content

Important Safety Instructions

Hazard Warning 4

Safety Instructions 4-5

Names of Machine Parts

Names of Machine Parts 6-8

Turn On/Off the Machine

Turn On/Off the Machine 9

Mode Selection Page 10

Language Settings 11

Connect to Institch Cloud 12-13

Embroidery Frames Introduction

Embroidery Frames Introduction 14-15

Thread Settings

Upper Threading 16-19

Install the Bobbin 20-21

Wind the Bobbin Thread 22-24

Replace the Needle

How to Replace The Needle 25

Get PDF manual from poolinstore.com

Content

Install/Remove Embroidery Table and Frame

Install/Remove Embroidery Table 26

Attach the Frame and Fabric 27-28

Detach the Frame 29

Upper Thread Tension Adjustment

How to Adjust the Upper Thread Tension 30-31

Pattern Selection

Pattern Selection Page Introduction 32-34

Letter Embroidery 35

Institch Cloud Folder 36

Import Patterns from USB to Machine 37

Direct Embroidery from Patterns on USB 38

Combine Multiple Patterns for Emb 39

Pattern Editing

Pattern Editing Page Introduction 40-41

Set Pattern Colors 42

Set Preview Background Color 43

Select Embroidery Frame 44

Letter Editing 45-46

Rotate Pattern 47

Scale Pattern 48

Get PDF manual from poolinstore.com

Content

Mirror Pattern ····· 49

Reset Edited Pattern ····· 50

Save Edited Pattern ····· 51

Delete Edited Pattern ····· 52

Pattern Embroidery

Pattern Embroidery Page Introduction ····· 53-54

Stitch Forward/Backward ····· 55-56

Color Forward/Backward ····· 57

Settings

Settings Main Page Introduction ····· 58-59

Common Issues and Solutions

Common Issues and Solutions ····· 60-61

Get PDF manual from poolinstore.com

Important Safety Instructions

Please take this machine seriously and do not treat it as a toy. When operating or using the machine, always observe the following safety precautions:

1. Do not operate the machine with blocked ventilation openings.
2. Do not use the machine outdoors.
3. Do not operate the machine in areas where aerosol (spray) products are being used or where oxygen is being administered.
4. To disconnect the machine, turn the main switch to the “O” (Off) position.
5. Do not unplug the machine by pulling the cord. Always grasp the plug—not the cord—when unplugging.
6. Keep fingers away from all moving parts, especially around the needle area.
7. Do not use a bent needle.
8. Do not pull or push the fabric while embroidering. This may cause the needle to bend or break.
9. This embroidery machine is not intended for use by young children or individuals with reduced physical or mental capabilities without supervision.

WARNING

Instructions for safe operation:

1. Pay attention to the needle during embroidery, and avoid pulling the thread directly, touching the hand wheel, needle or other moving parts.
2. Please switch the machine to the symbol “0” to turn it off and unplug the machine from the outlet under the following circumstances:
   - Operation completed
   - Replacing or disassembling embroidery needles or any other parts
   - Power failure occurs during use
3. Plug the machine directly into the electrical outlet, do not use an extension cord.
4. Do not place or store the machine near any extreme environment (high temperature, low temperature, high humidity or dust area), heater or other thermal appliances, so as not to cause machine failure.

Get PDF manual from poolinstore.com

Important Safety Instructions

5. The plastic bag that this machine was supplied in should be kept out of the reach of children or disposed of. Never allow children to play with the bag due to the danger of suffocation.
6. Do not place the embroidery machine on an unstable or inclined table, otherwise the machine may fall, resulting in injuries.

For a longer service life:

1. When storing the machine, please avoid direct sunlight and high humidity locations. Never use or store this machine near heaters, irons, halogen lamps, or other hot objects.
2. Only use neutral soap or detergents to clean the machine shell. Benzene, thinner or sourcing powder can damage the machine, and should never be used.
3. Do not let the machine drop or be impacted.
4. Always consult the operation manual when replacing or installing any assemblies, needle, or other parts to assure correct installation.
5. Only the interface cable (USB cable) included with the machine can be used, and it cannot be replaced by other types of cables.

Repair or adjustment:

In the event of a malfunction occurs or requires adjustments, first follow the troubleshooting table on the back of the operation manual to inspect and adjust the machine yourself. If the problem persists, please consult our after-sales personnel. They provide professional help and support. Never attempt to repair the machine yourself as this could cause more serious damage.

Get PDF manual from poolinstore.com

Names of Machine Parts

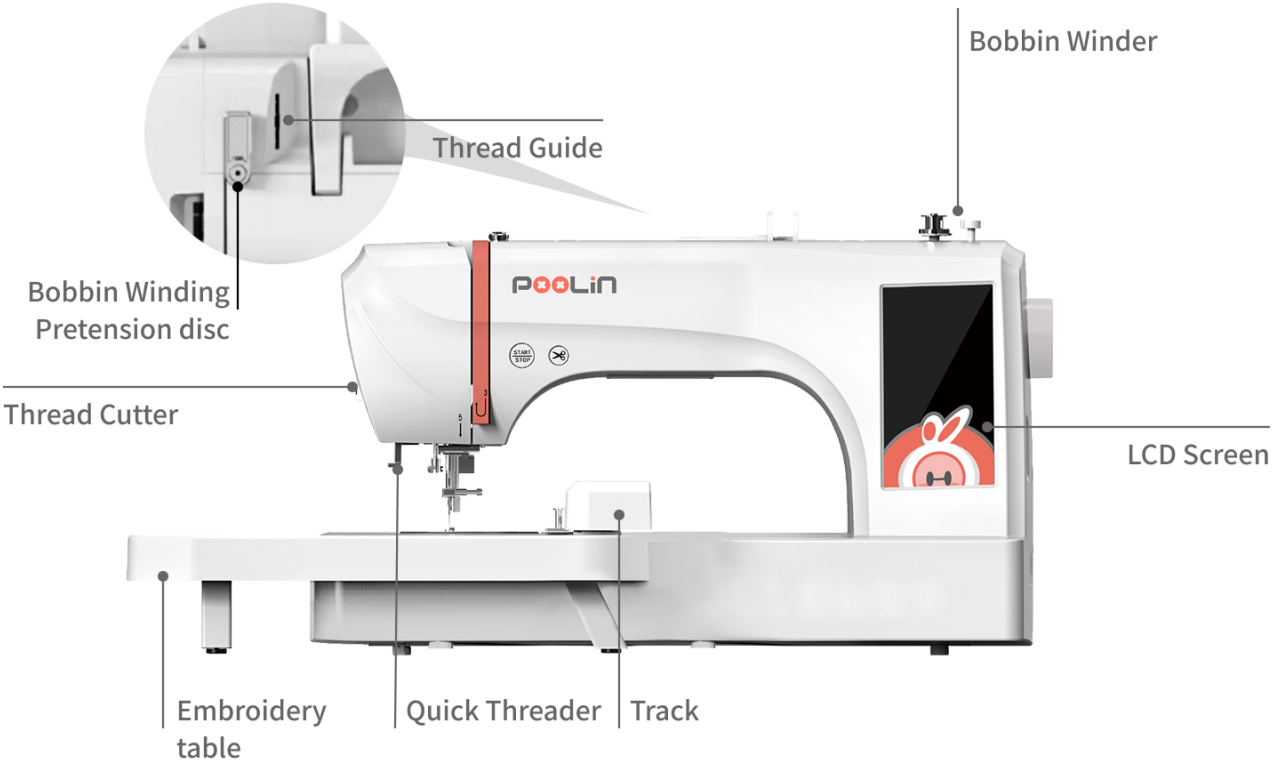

Description of Functions

Contents	Description
LCD Screen	For display and operation.
Bobbin Winder	Place an empty bobbin when winding bobbin thread.
Thread Guide	Upper thread guide hook.
Bobbin Winding Pretension disc	Control the tension when winding the bobbin thread.
Thread Cutter	For cutting upper thread.
Quick Threader	Quickly thread the upper thread through the eye of the needle.

Get PDF manual from poolinstore.com

Names of Machine Parts

Contents	Description
Embroidery table	Used to support the embroidery frame
Track	Control embroidery frame movement

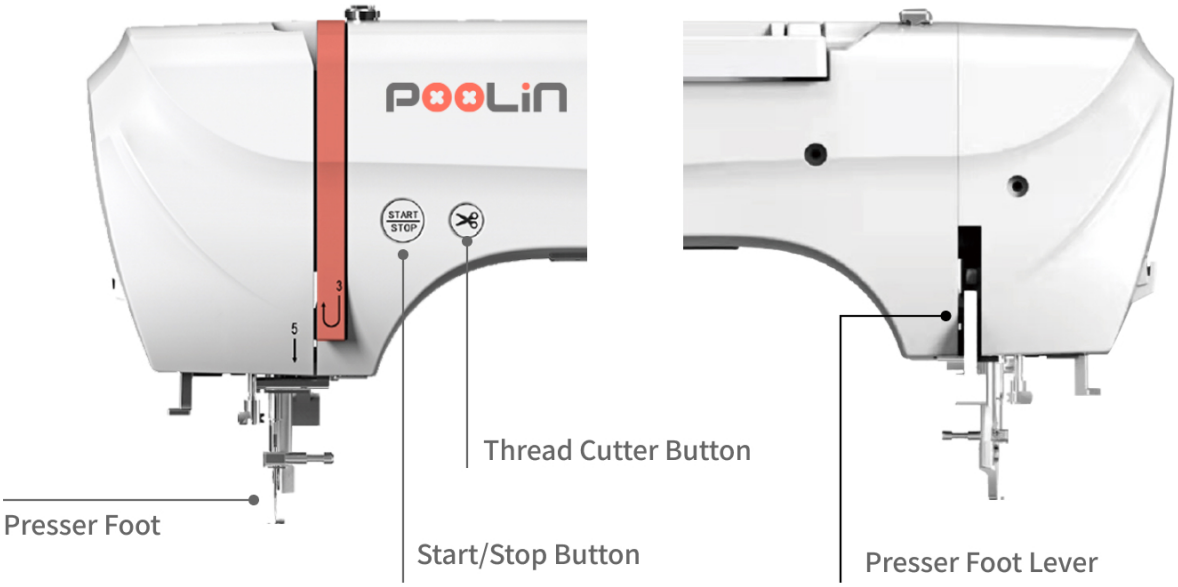

Enlarged close-up of the appearance of the fuselage

Contents	Description
Presser Foot	For fixing fabric.
Presser Foot Lever	For raising/lowering the presser foot.
Thread Cutter Button	Press the button to cut the thread.
Start/Stop Button	Machine Start and Stop： After pressing the button, the machine will embroider a few stitches at a slower speed, and then automatically switch to the speed set by the embroidery speed controller for embroidery. Press the button again and the machine will stop. The color of this button will change according to the operating mode of the machine to provide a more visual indication.

Get PDF manual from poolinstore.com

Names of Machine Parts

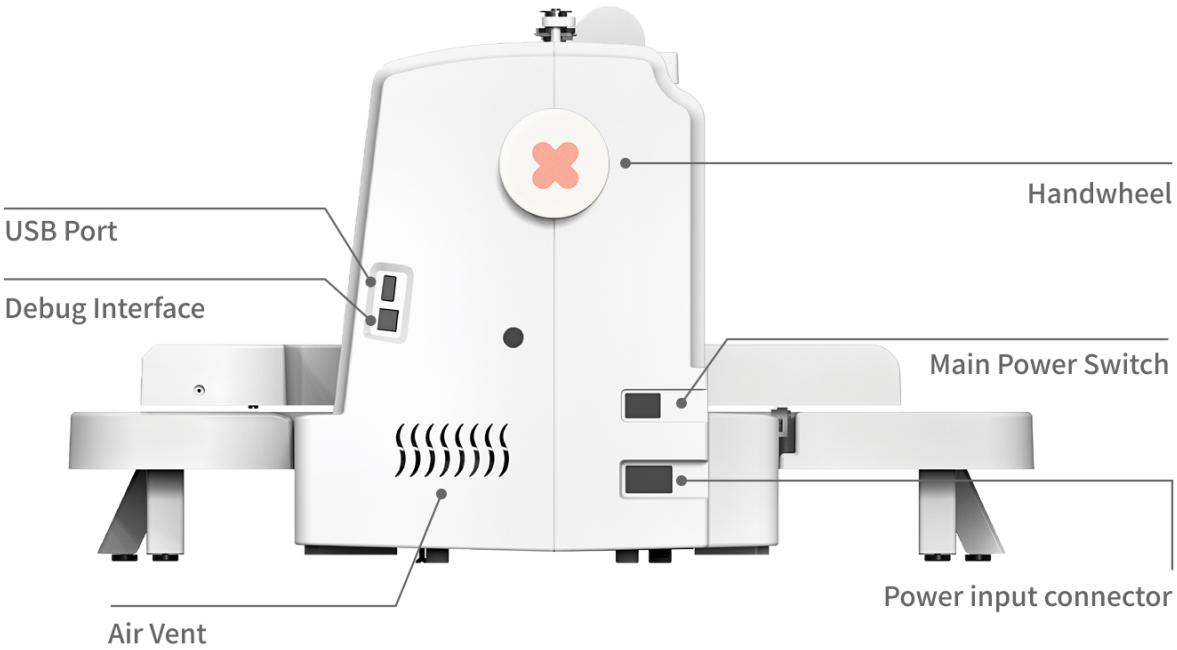

Contents	Description
USB Port	Connect USB for pattern transfer and system upgrade.
Main Power Switch	Turn on/off the machine.
Power Supply Jack	Connect the machine power cord.
Handwheel	Turn the handwheel to raise and lower the needle.
Air Vent	For machine cooling.
Debug Interface	For debugging the machine. No user operation is required.

Get PDF manual from poolinstore.com

Turn On/Off the Machine

DANGER

1. Use only regular household electricity for the power source. Using other power sources may result in fire, electric shock or damage to the machine:
   - Make sure the plugs on the power cord are firmly inserted into the electrical outlet and the power supply jack on the machine.
   - Do not insert the plug into an electrical outlet that is in poor condition.
2. Use only the power cord included with machine.
3. Do not use extension cords or multi-plug adapters with many other appliances plugged into them.
4. Do not touch the plug with wet hands, electric shock may result.
5. When unplugging the machine, be sure to turn off the main power first.
6. Pulling on the power cord may damage the cord, or lead to fire or electric shock.
7. Do not cut, damage, modify, forcibly bend, pull, twist or bundle the power cord.
8. Do not place heavy objects on the power cord.
9. Do not place the power cord under high temperature.

1 Connect the power cord.

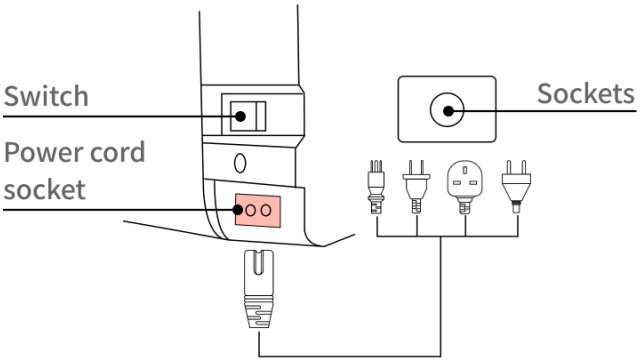

2 Set the switch to "I" to turn on the machine.

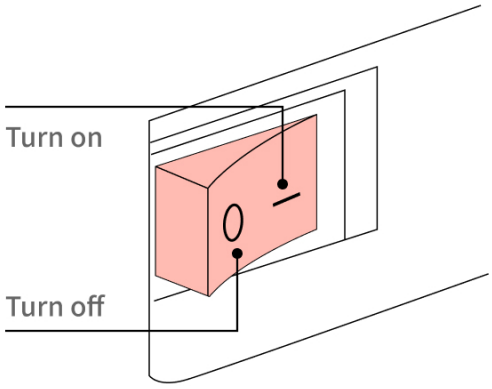

Tips:

Please make sure the machine is off while replacing the needle.

Tips:

Set the switch to "I" to turn on the machine.
Set the switch to "0" to turn off the machine.

Get PDF manual from poolinstore.com

Mode Selection Page

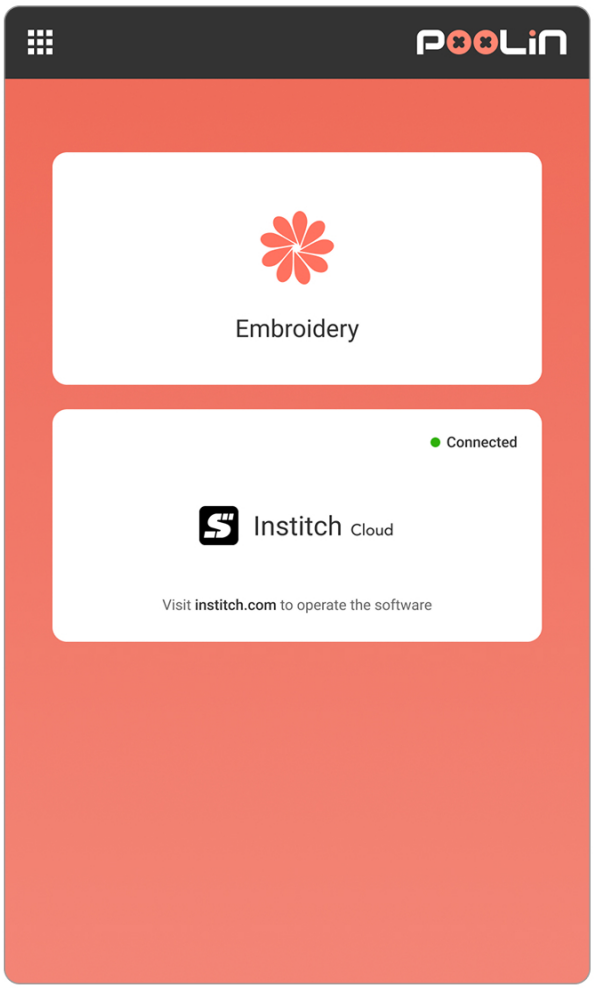

Description of Functions

Contents	Description
	Click the button to enter the embroidery home screen, where you can select patterns and start embroidery tasks.
	The current connection status between the device and the cloud platform is displayed to confirm whether the network connection is successful.

⚠ Tips:

Tap the top-left corner to enter Settings, where you can switch the interface language.

Get PDF manual from poolinstore.com

Language Settings

The factory default machine language is English, if you want to change another language, please follow the steps below to modify the language setting, and then operate the machine.

1 Tap

2 Tap Language Settings

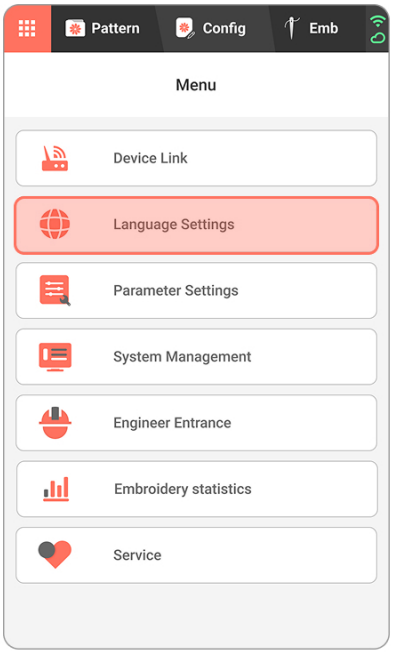

3 Select your local language.

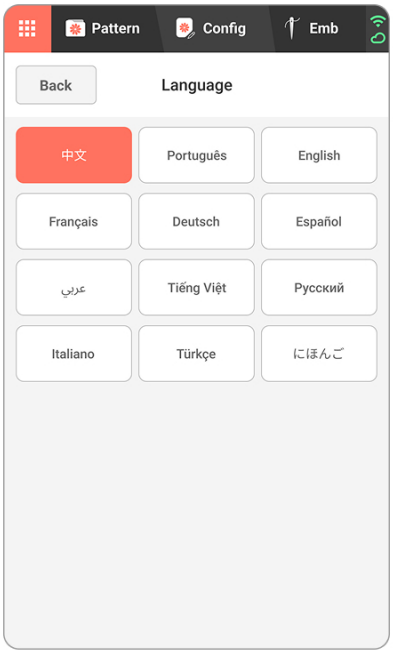

4 Tap Pattern Enter the pattern selection page

Get PDF manual from poolinstore.com

Connect to Institch Cloud

After successful binding, patterns will automatically sync to the Institch Cloud Platform. You can manage patterns remotely or send them to the device for real-time syncing and transfer.Please make sure the file is in DST or DSB format.For more information, visit:Institch.com

1 Tap

2 Tap Device Connection

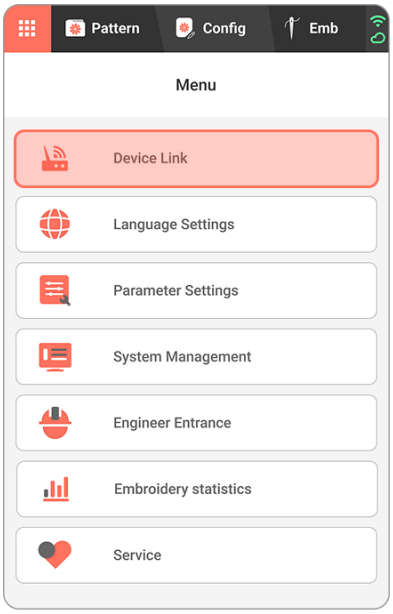

3 Tap Wi-Fi Settings

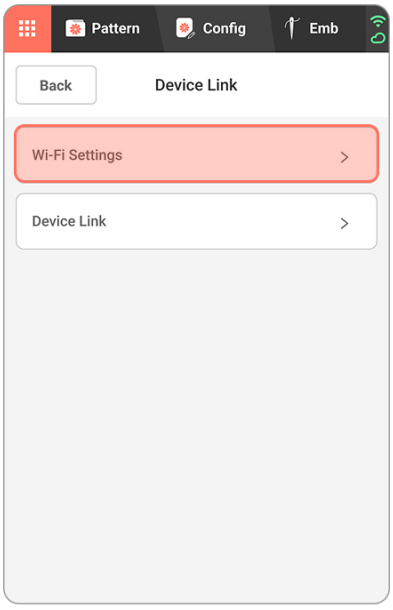

4 Choose a network from the list. Once connected, the current network status will be displayed.

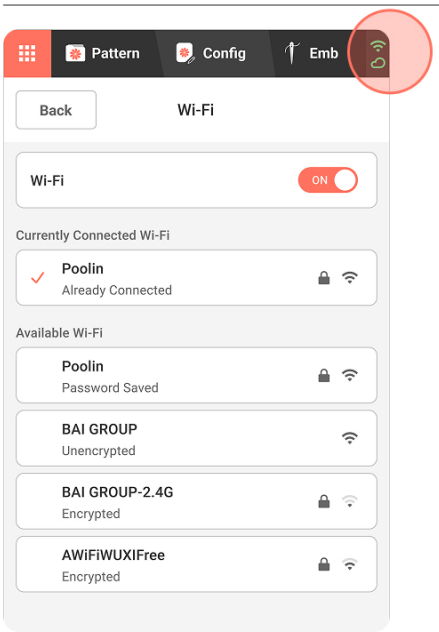

Get PDF manual from poolinstore.com

Connect to Institch Cloud

After successful binding, patterns will automatically sync to the Institch Cloud Platform.
You can manage patterns remotely or send them to the device for real-time syncing and transfer.Please make sure the file is in DST or DSB format.For more information, visit:Institch.com

5 Tap Device Connection

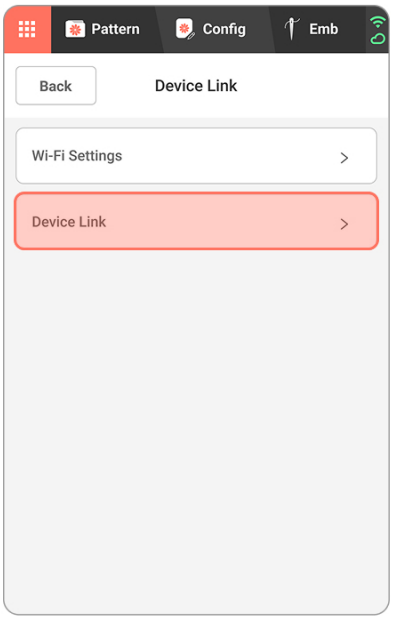

6 Enable Sync Patterns to Institch Cloud Platform

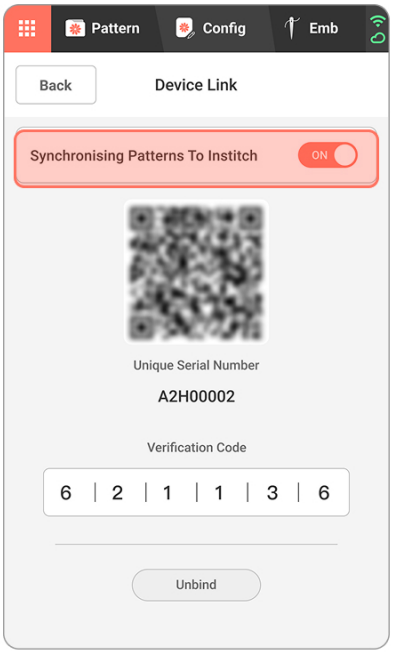

7 After logging into your Institch Cloud account, follow the on-screen instructions to bind your machine.

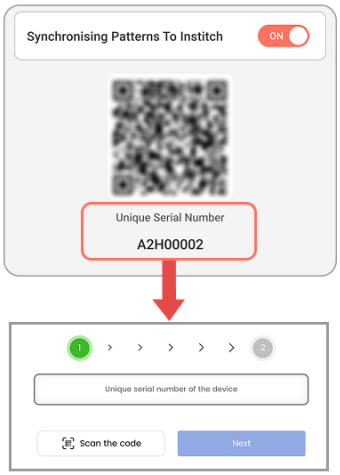

Step 1

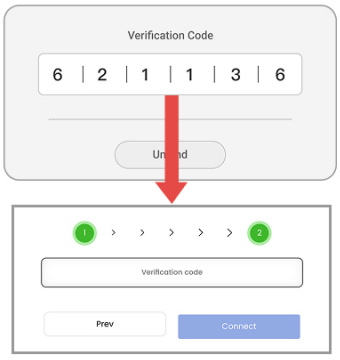

Step 2

⚠ Tips:

Cloud binding is a one-time setup — once bound, your device information will sync to the Institch platform.
To unbind, tap the Unbind button under Device Binding.
If you encounter any issues, technical support is available via our official social media channels.

Facebook: **Institch Doodle Digitizing**

Get PDF manual from poolinstore.com

Embroidery Frames Introduction

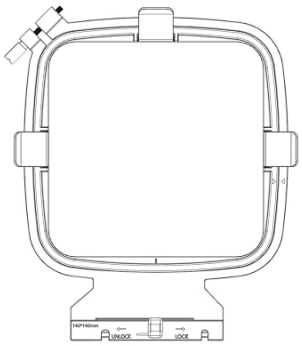

Small Frame

Embroidery Area:
140mm *140mm
5.5" * 5.5"

For embroidery patterns below 140mmX140mm.

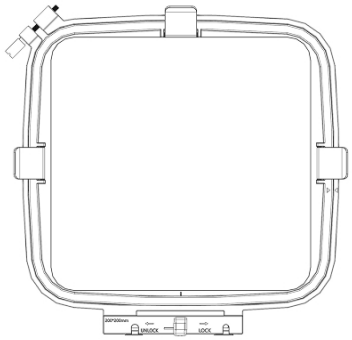

Medium Frame

Embroidery Area:
200mm * 200mm
7.9" * 7.9"

For embroidery patterns below 140mmX140mm.

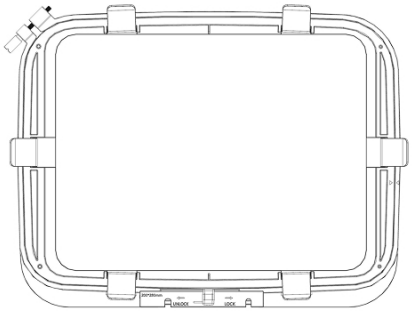

Large frame

Embroidery Area:
200mm *280mm
7.9" * 11"

⚠ Tips:

Embroidery frame needs to be chosen according to the size of patterns, embroidery area should be larger than pattern.

Get PDF manual from poolinstore.com

Embroidery Frames Introduction

Note:The attached embroidery frame must match the corresponding embroidery frame displayed on the screen, otherwise the frame collision may occur, resulting in damage to the machine.

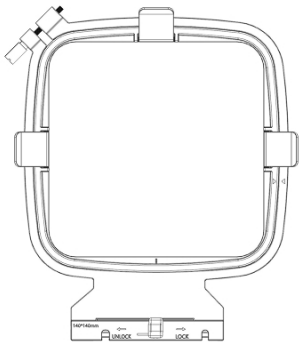

Small Frame →

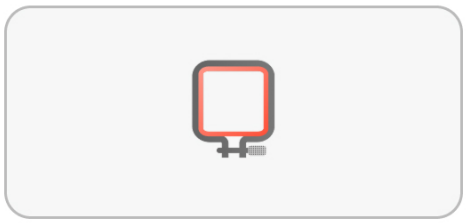

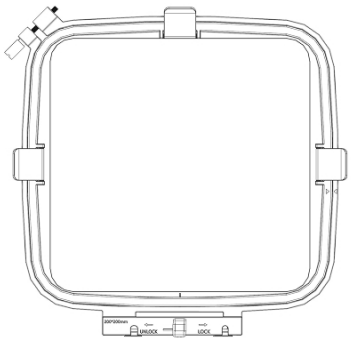

Medium Frame →

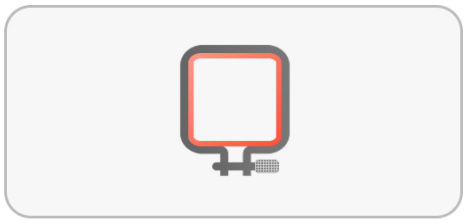

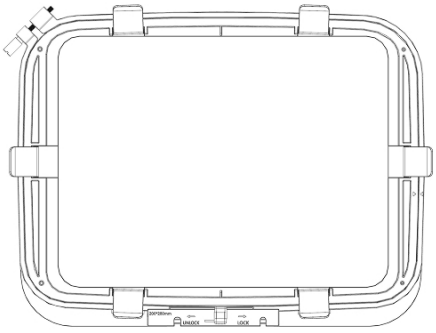

Large frame →

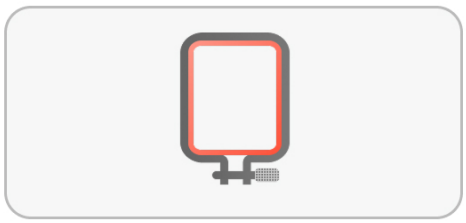

Get PDF manual from poolinstore.com

Upper Threading

1 Raise the presser foot lever.

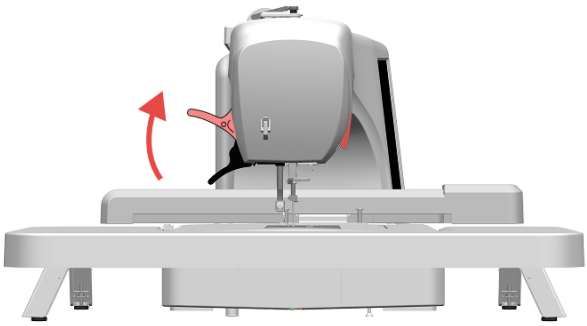

Tips:

Raising the presser foot lever is to ensure that the upper thread can pass through the pressure piece correctly, so that the tension of the upper thread can be adjusted to avoid thread jam, thread breakage and false alarm.

2 Turn the handwheel to raise the needle to the highest needle position.

Tips:

If you use the easy-to-use threader to thread the needle without raising the needle position, the thread may not be threaded correctly.

3 Lift up the spool pin.

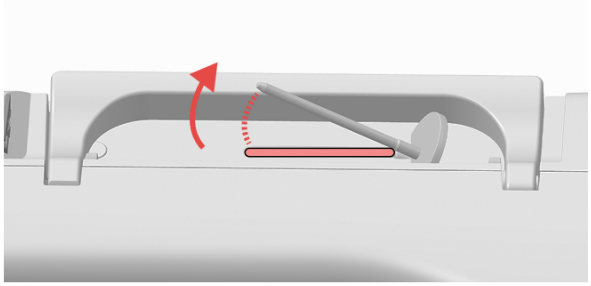

4 Place the spool of thread on the spool pin to make the thread spread out from the top of the thread spool.

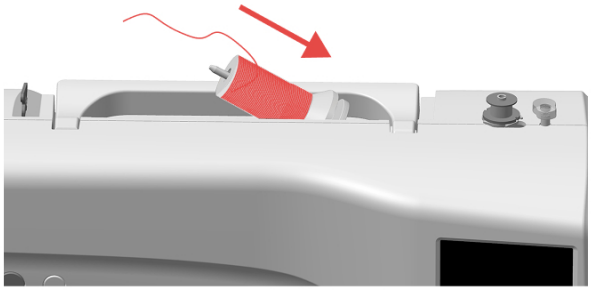

5 Slide the spool cap onto the spool pin.

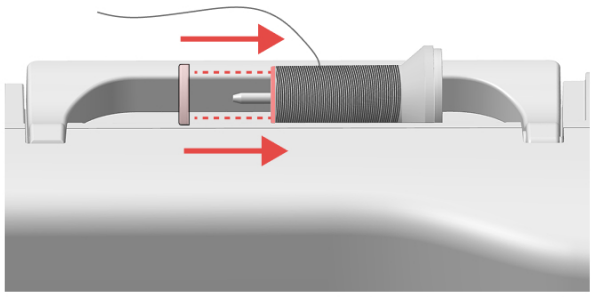

Tips:

Use the spool cap that is the closest size to the thread spool (large, medium, small) If you use a spool cap that is smaller than the thread spool, the thread may get caught in the slit at the end of the spool, resulting in thread and needle breakage.

Get PDF manual from poolinstore.com

Upper Threading

6 Hold the thread with both hands and guide it through the thread hook.

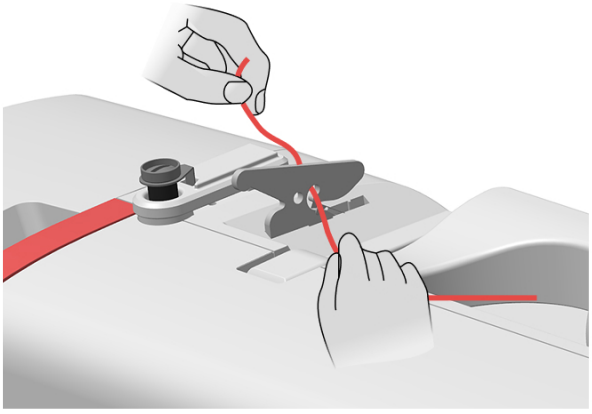

7 Wrap the thread around the hook in the direction shown in the diagram.

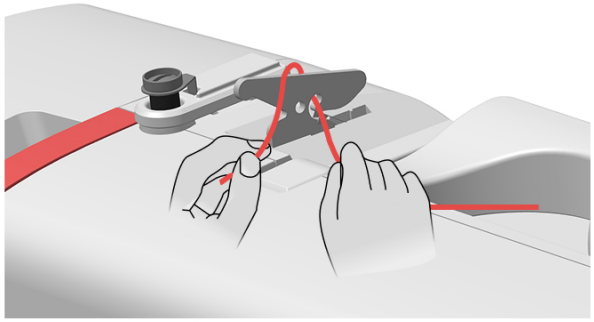

8 Hold the thread firmly with your right hand and pull it with your left hand.

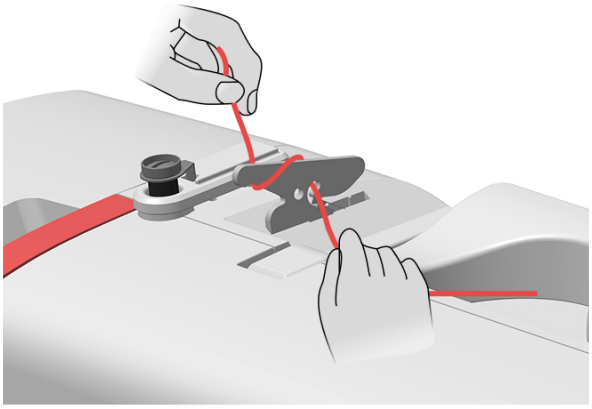

9 Pass the thread through the guide plate.

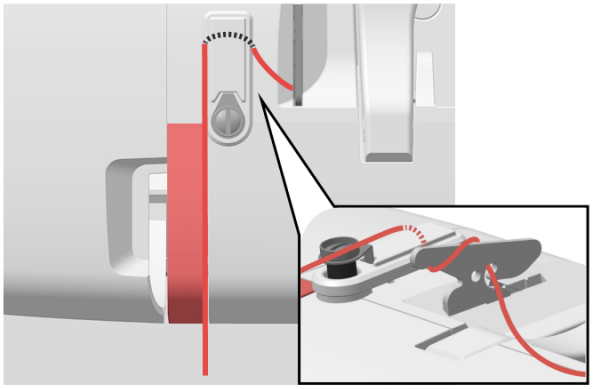

10 Lead the thread downward, then upward through the tension spring.

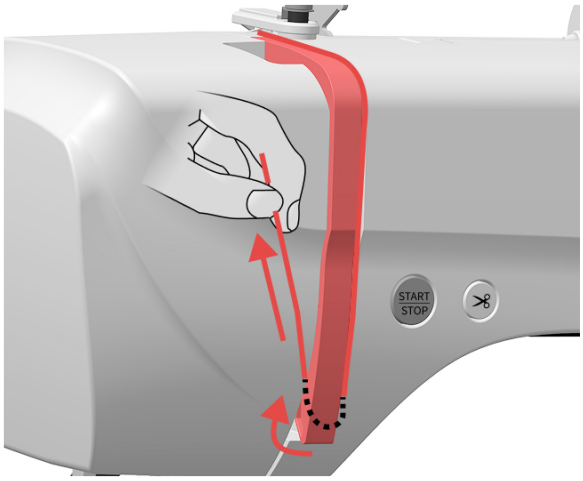

Get PDF manual from poolinstore.com

Upper Threading

11 Thread it through the take-up lever.

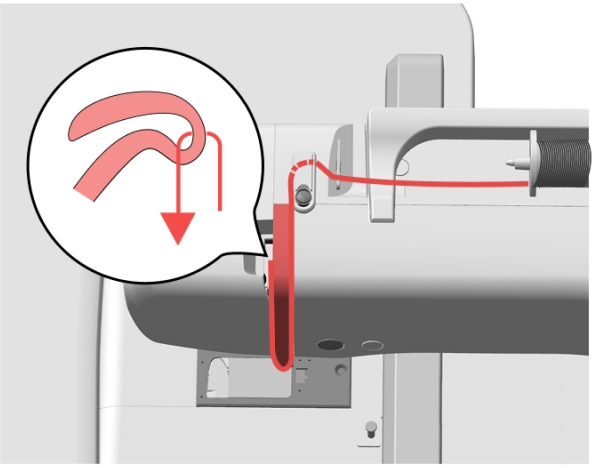

⚠ Tips:

When threading, please make sure to pass through the thread take-up lever, otherwise it will cause thread jam and thread breakage.

12 Pass the thread through the upper and lower thread guides on the needle bar in order.

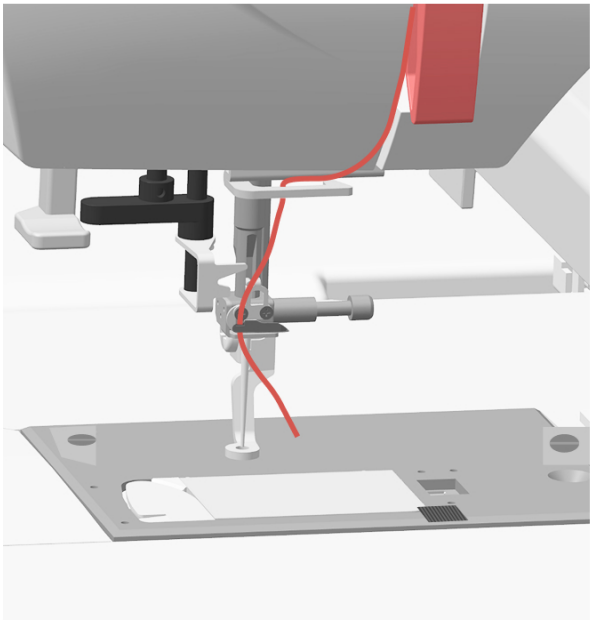

13 Pull the thread across the threading groove and upward. Use the cutter inside the groove to trim the thread.

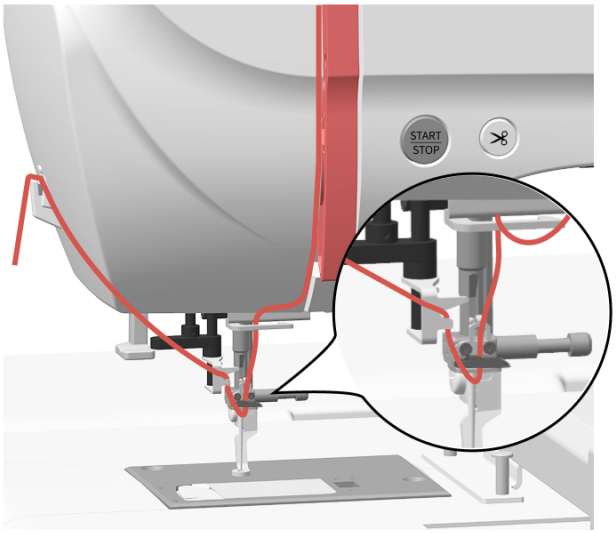

14 Press the threader down fully.

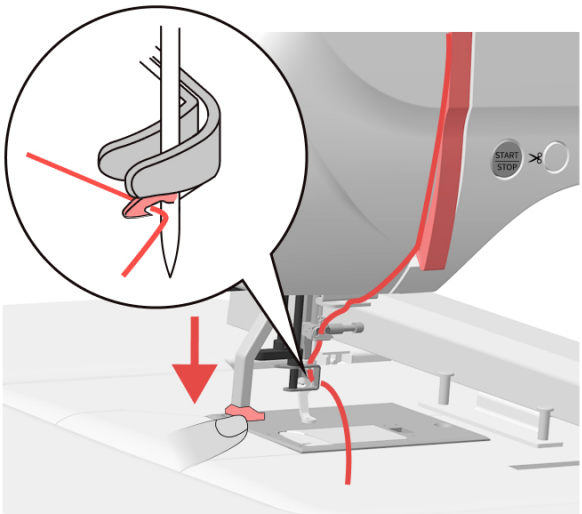

Get PDF manual from poolinstore.com

Upper Threading

15 Slowly raise the threader. The thread will pass through the needle eye, forming a loop behind the needle. Pull the loop to bring the thread through.

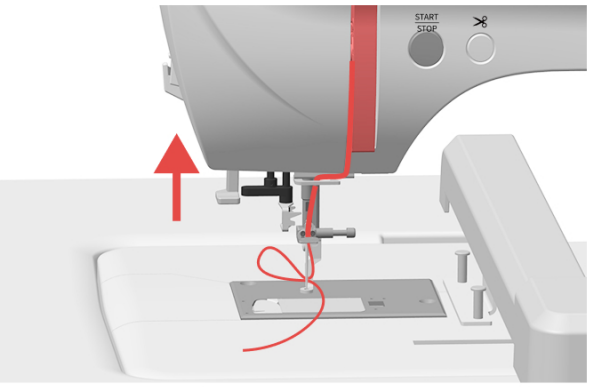

Tips:

Please be careful not to prick your fingers when pulling the thread out of the eye of the needle.

16 Finally, pass the thread under the presser foot.

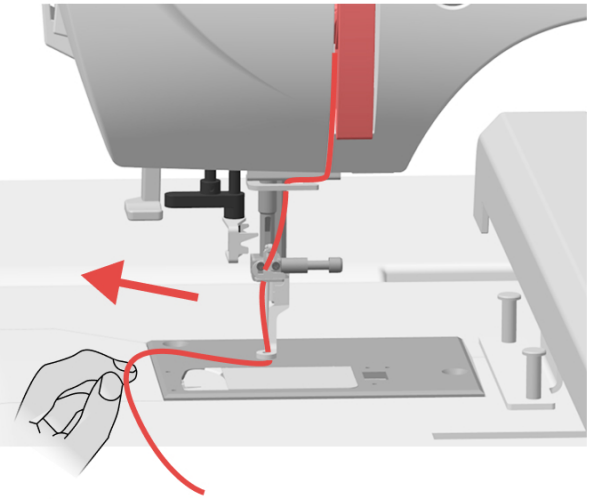

Note: When the needle threader cannot be used, manually pass the thread through the eye of the needle from front to back.

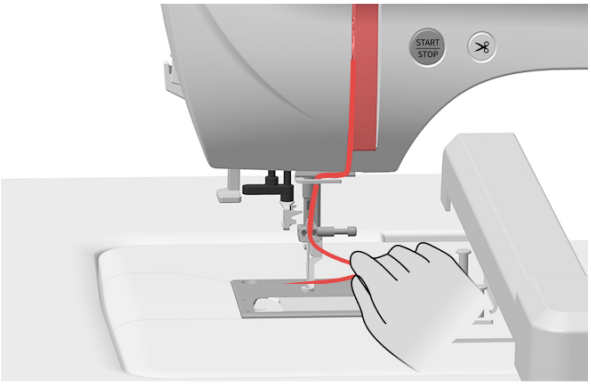

Tips:

After the thread passes through the eye of the needle, you need to ensure that the length of the thread end is about 80mm.

Get PDF manual from poolinstore.com

Install the Bobbin

1 Slide the bobbin cover latch to the right.

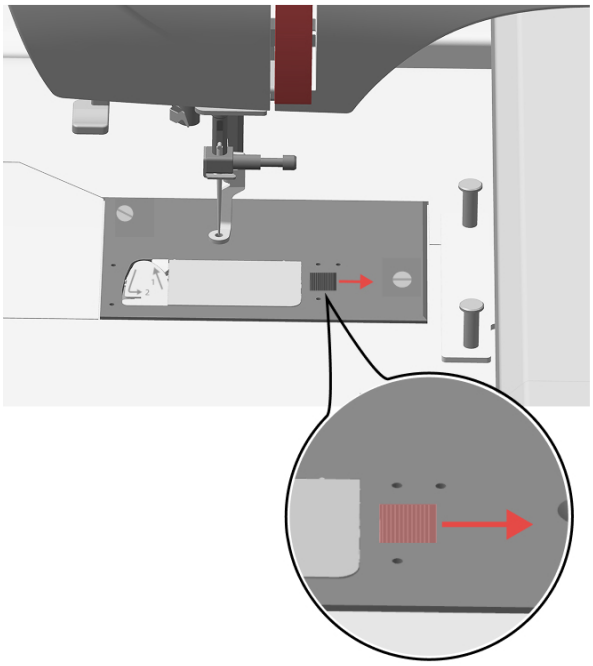

2 Remove the bobbin cover and the used bobbin.

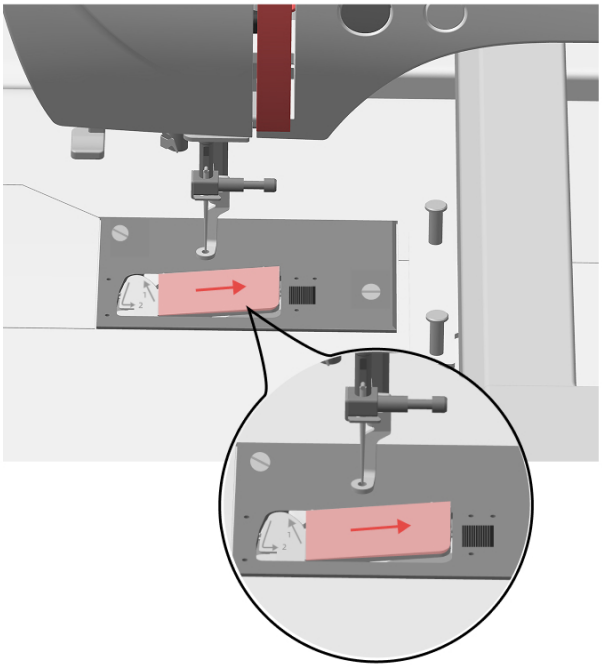

3 Hold the bobbin with your right hand, pull the end of the thread with your left hand, keep the direction of the thread counterclockwise, and insert the bobbin.

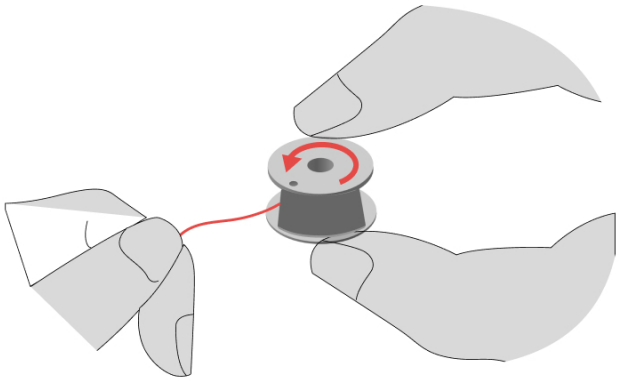

⚠ Tips:

Please make sure that the thread direction is correct when installing the bobbin, otherwise it may lead to thread breaking or incorrect tension of the thread.

4 Pass the thread through the slot as shown in the figure, then pull the thread out towards the front.

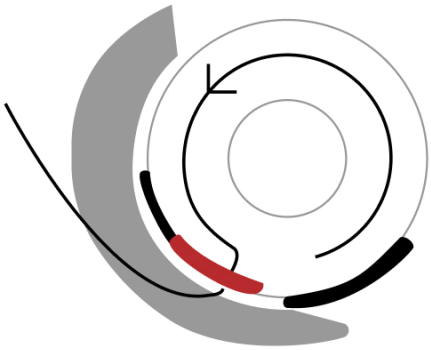

Get PDF manual from poolinstore.com

Install the Bobbin

5 Then use the built-in cutter to cut the thread.

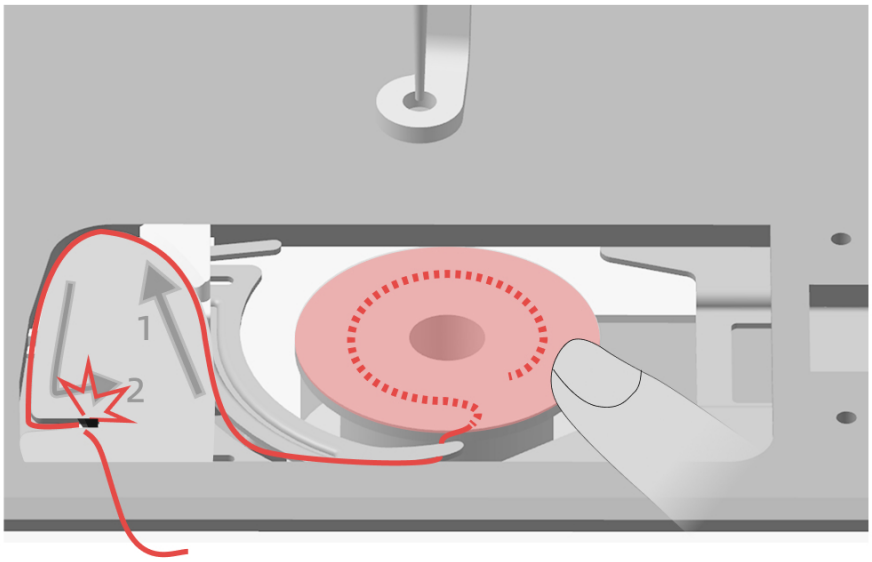

6 Insert the protruding part of the bobbin cover into the left slot, and gently press the right side of the cover to close it.

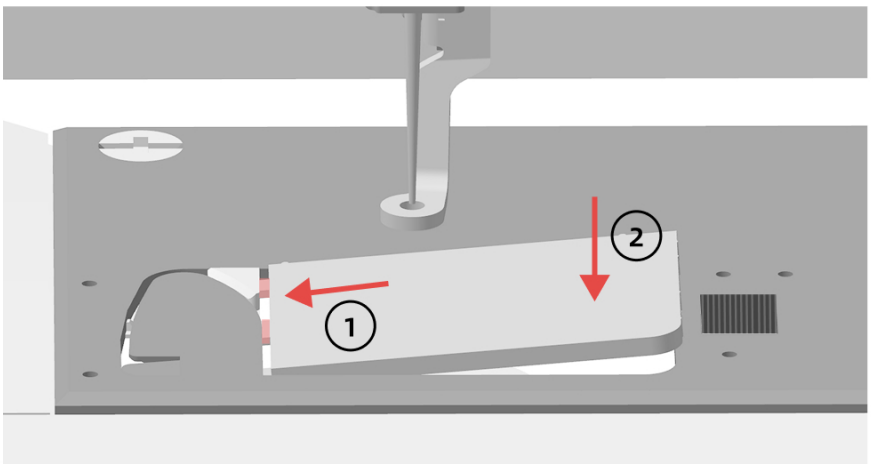

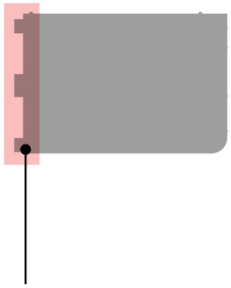

1 Insert the protruding part of the bobbin cover into the slot.

2 Gently press the right side of the cover.

Get PDF manual from poolinstore.com

Wind the Bobbin Thread

1 Turn on the machine.

2 Align the notch on the bobbin with the spring on the winder shaft, and push the bobbin down onto the shaft.

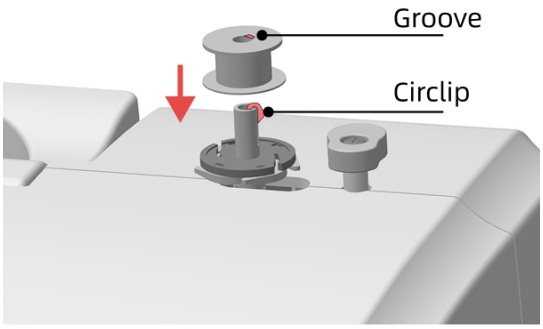

3 Raise the spool pin.

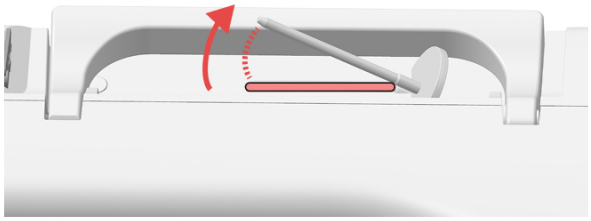

4 Place the thread spool onto the spool pin so that the thread unwinds from the front.

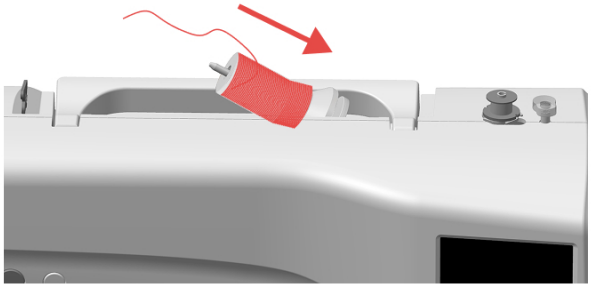

5 Attach the spool cap to the spool pin.

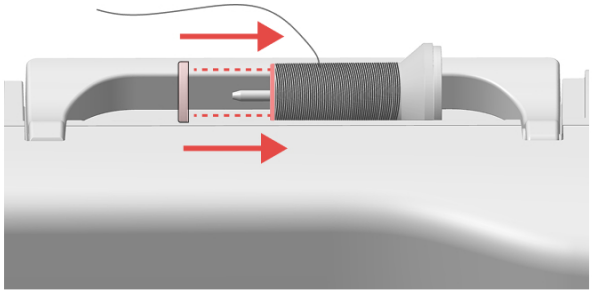

⚠ Tips:

Three spool cap sizes are available(large, medium, small) allowing you to choose a spool cap that best fits the size of the spool being used . If the spool cap is too small for the spool being used, the thread may get caught on the slit in the spool, causing the thread breaking and needle breaking.

Get PDF manual from poolinstore.com

Wind the Bobbin Thread

6 Pass the thread through the thread guide hole.

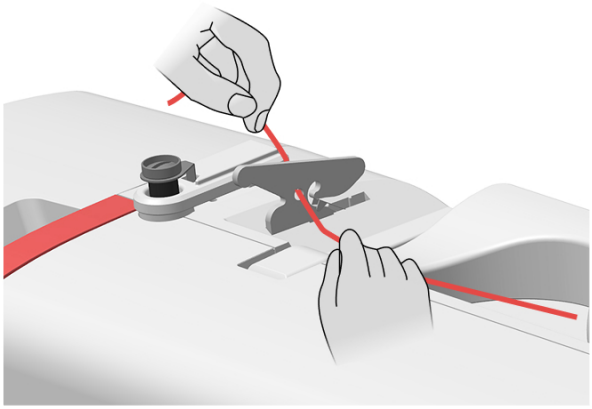

7 Follow the illustrated direction to wrap the thread around the bobbin winding tension disc, ensuring the thread is positioned under the tension disc.

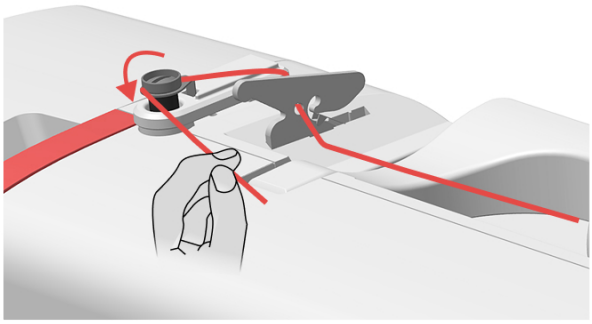

8 Pull the thread straight to the right.

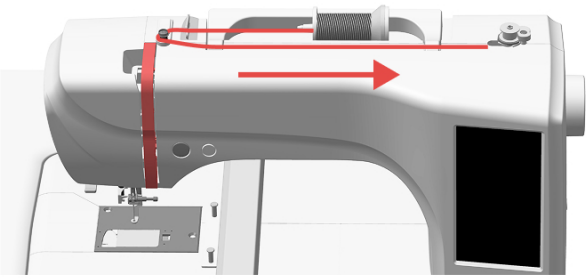

9 Wind the thread clockwise around the bobbin shaft 5–6 times.

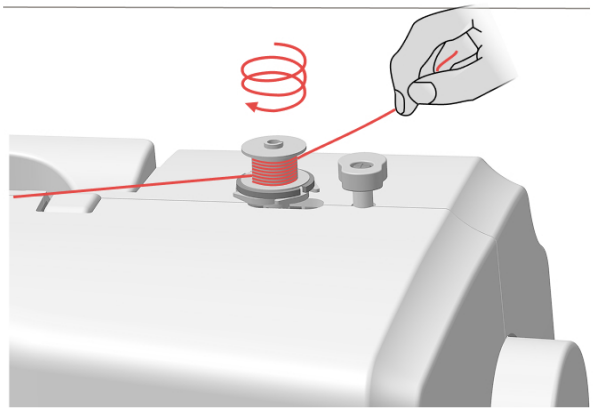

10 Insert the thread end into the groove on the bobbin holder, then pull the thread to the right and use the built-in thread cutter to trim it.

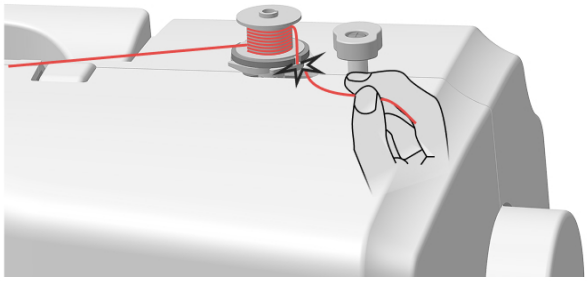

11 Push the bobbin shaft to the right.

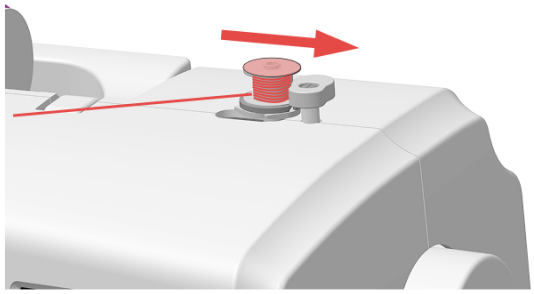

Get PDF manual from poolinstore.com

Wind the Bobbin Thread

12 Tap the Start button to begin automatic winding.

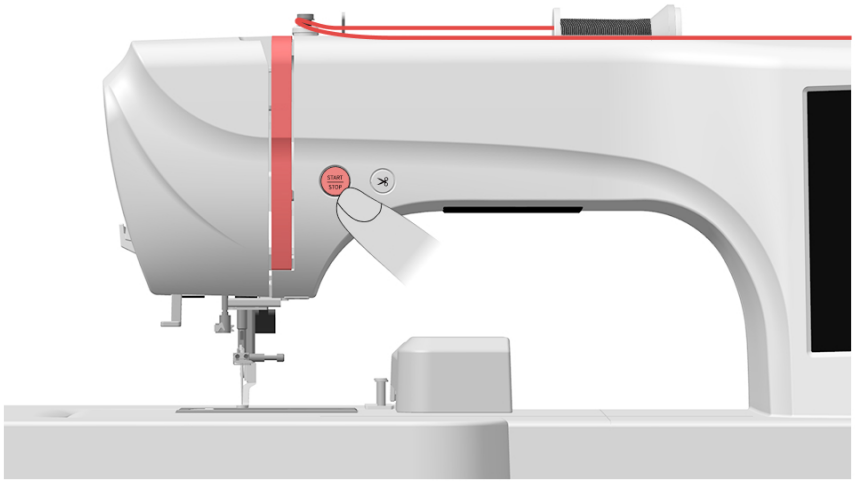

13 Once winding is complete, cut the thread with scissors, push the bobbin shaft to the left, and pull the bobbin upward to remove it.

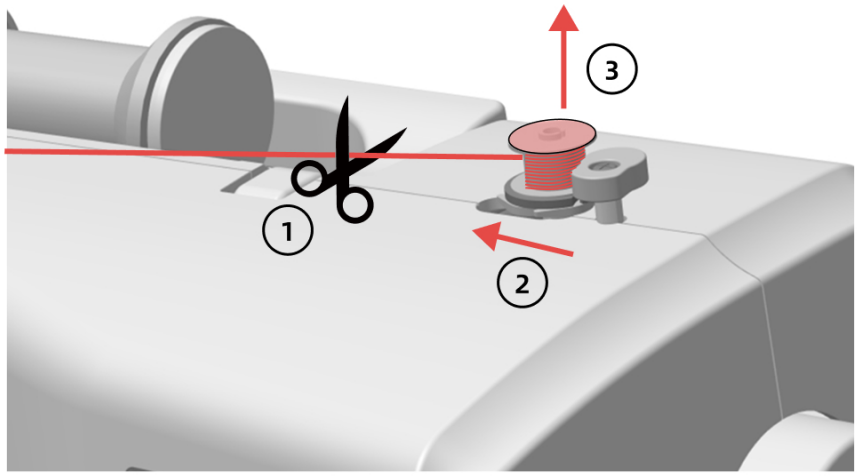

Tips:

Please use the bobbin included with the machine to wind the thread, if you want to buy it, please choose the same size bobbin in the picture below. Otherwise, the machine will not work normally.

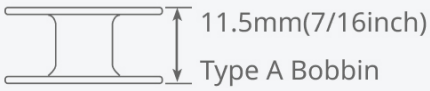

Get PDF manual from poolinstore.com

How to Replace The Needle

1 Turn off the machine.

2 Use a screwdriver to turn the screw counterclockwise and loosen it. Remove the needle that needs to be replaced.

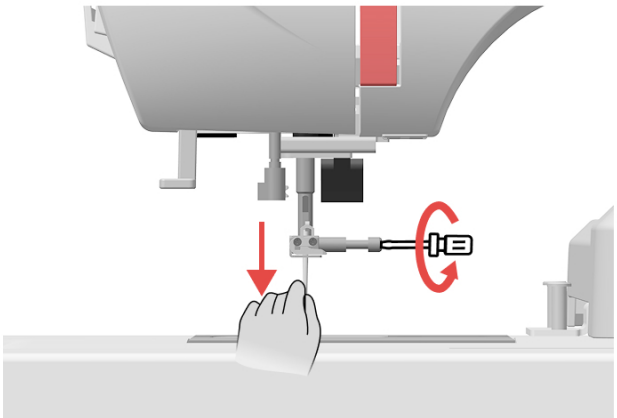

⚠ Tips:

Before replacing the needle, please turn off the machine and cover the hole on the needle plate with a cloth or paper to prevent the needle from falling into the machine.

3 Insert the new needle with the flat side facing the back, and push it upward into the needle clamp until it touches the needle stopper.
Use the screwdriver to tighten the needle clamp screw securely.

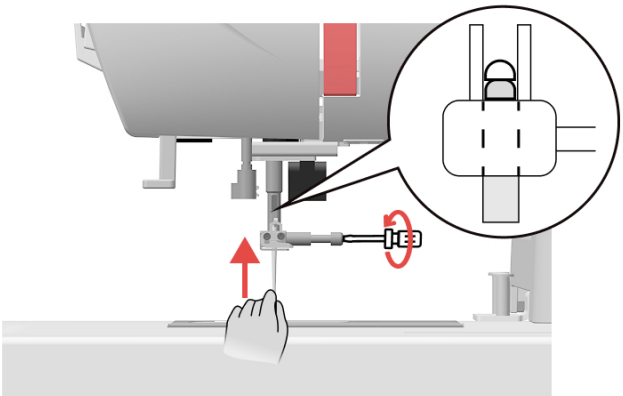

⚠ Tips:

1. When installing the embroidery needle, ensure that the flat side of the needle shank is facing the rear (toward the machine).
2. If the needle is not fully inserted or the clamp screw is loose, it may cause the needle to break or damage the machine.

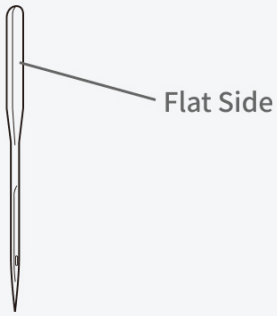

Get PDF manual from poolinstore.com

Install/Remove Embroidery Table

Installing the Embroidery Extension Table

Unfold the four support legs of the embroidery table. Push the table horizontally into place until it snaps into the machine's tabletop.

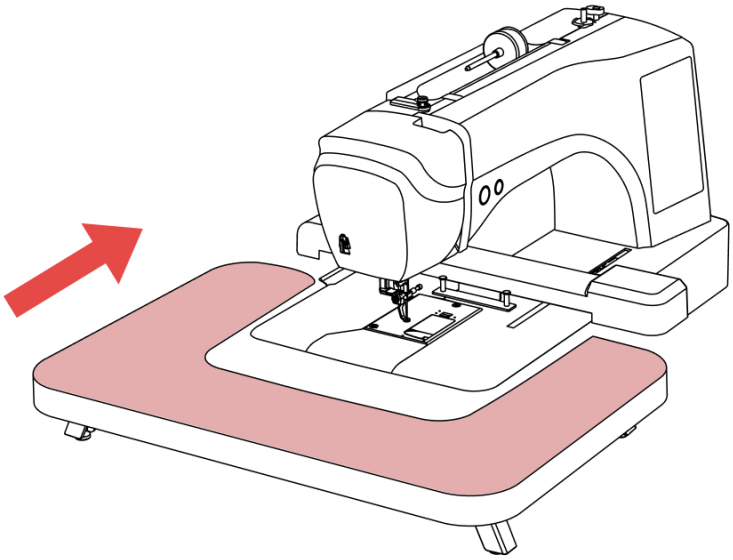

Removing the Embroidery Extension Table

Pull the table horizontally to detach it from the machine's tabletop.

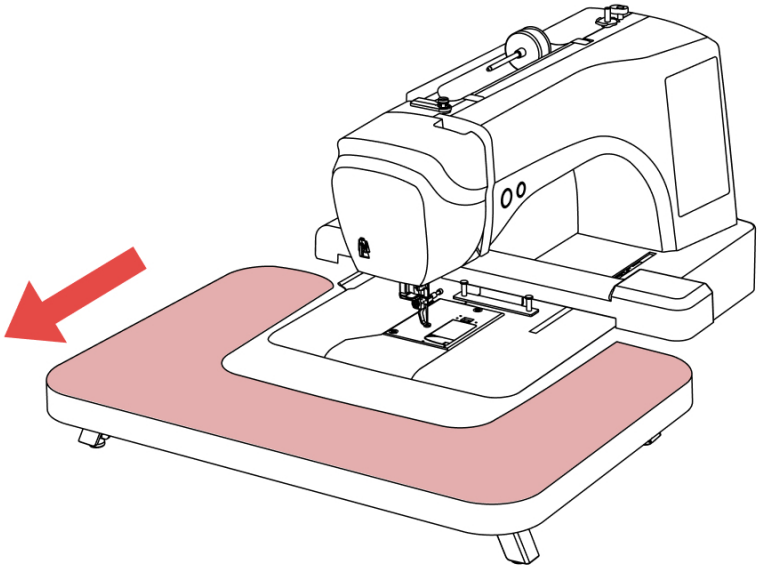

⚠ Tips:

Rotate the adjustment screws on the four support legs to align the table height with the machine' s tabletop for a level working surface.

Get PDF manual from poolinstore.com

Attach the Frame and Fabric

1 Loosen the embroidery frame adjustment screw and remove the inner frame.

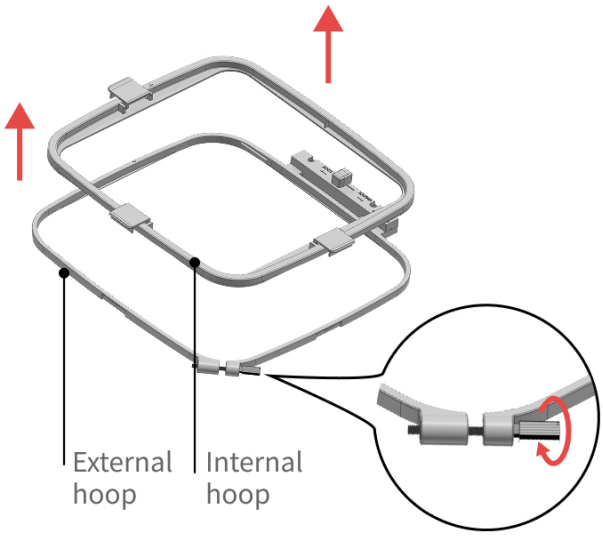

2 Place the stabilizer on top of the outer embroidery frame, and lay the fabric face up on top of the stabilizer.

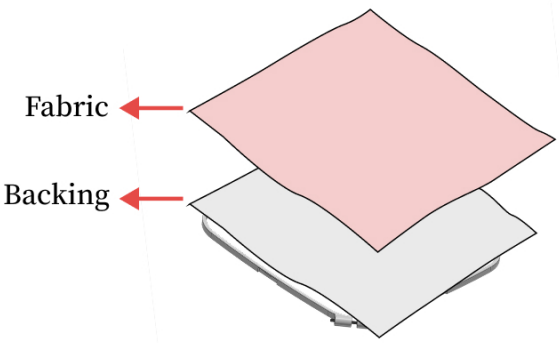

⚠ Tips:

The stabilizer and fabric should be larger than the area of the embroidery frame to ensure the fabric can be fixed on the frame and avoid misalignment of embroidery.

3 Press the inner frame in from the top of the fabric and make sure the inner frame is aligned with the outer frame.

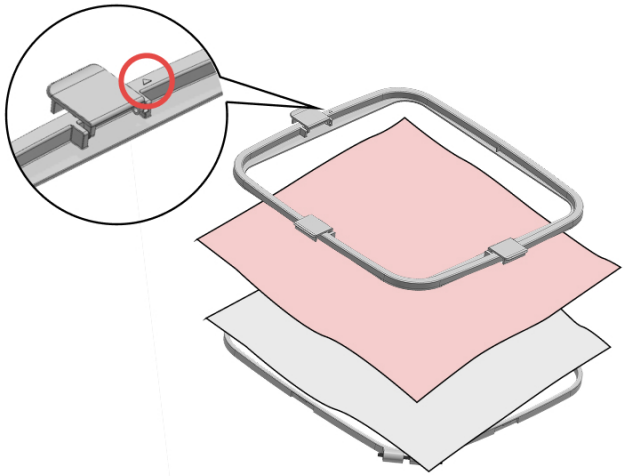

⚠ Tips:

Line up △ on the inner frame and ▽ on outer.

4 Gently stretch the edges and corners of the fabric to remove the wrinkle.

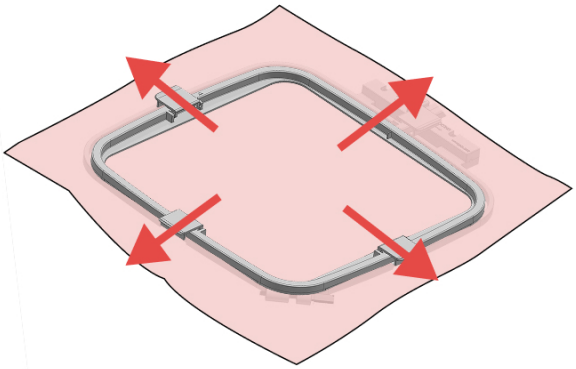

Get PDF manual from poolinstore.com

Attach the Frame and Fabric

5 Tighten the frame adjustment screw to remove the slack in the fabric.

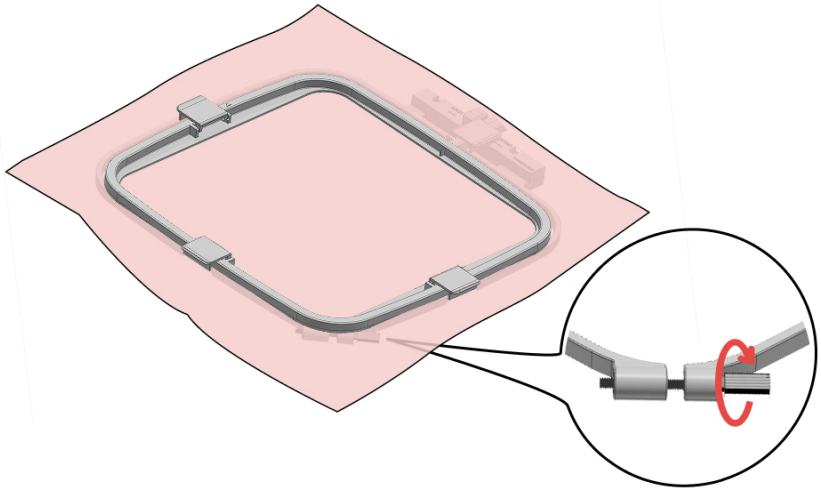

6 Raise the presser foot lever, attach the frame on the rail, press the frame down to insert the frame guide into the embroidery carriage frame holder from the top.

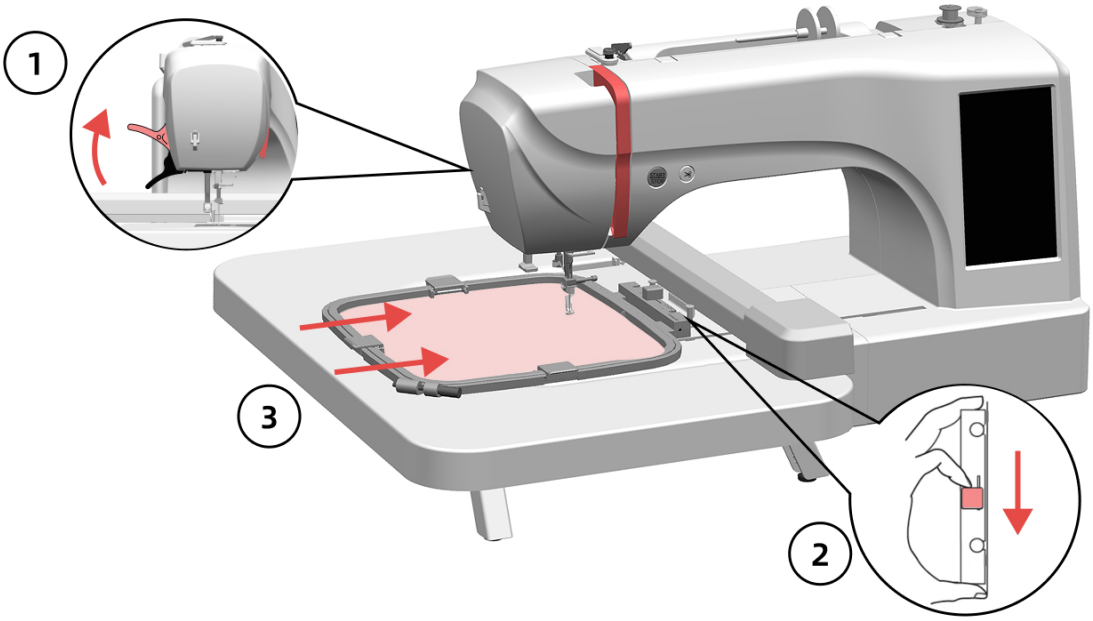

⚠ Tips:

If the height of the presser foot is not enough to attach the frame, you can continue to raise the presser foot lever to make it higher, so as to ensure the smooth installation of the embroidery frame.

Get PDF manual from poolinstore.com

Detach the Frame

1 Raise the presser foot lever.

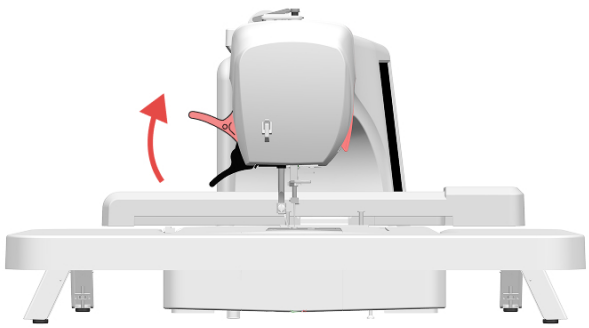

2 Push the latch in the direction of the arrow by hand.

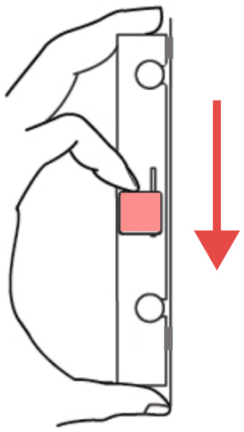

3 Lift the embroidery frame upward to fully release it from the slot, then remove the frame.

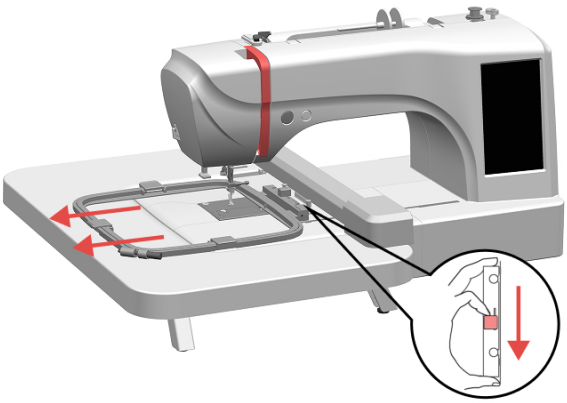

⚠ Tips:

If the height of the presser foot is not enough to remove the frame, you can continue to raise the presser foot lever to make it higher, so as to ensure the smooth remove of the embroidery frame.

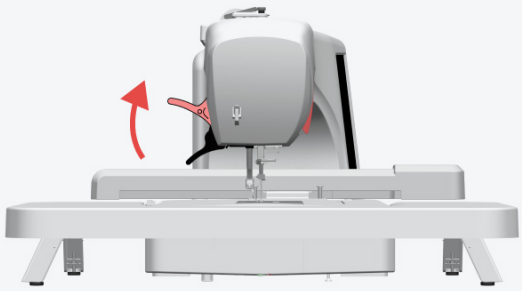

Get PDF manual from poolinstore.com

Upper Thread Tension Adjustment

When embroidering, the correct standard of thread tension should be:

1.The top thread is slightly visible on the back of the fabric.
2.The front of the fabric can not see the bottom thread at all and there is no floating thread on the surface.

Correct Tension Display Diagram

Fabric front

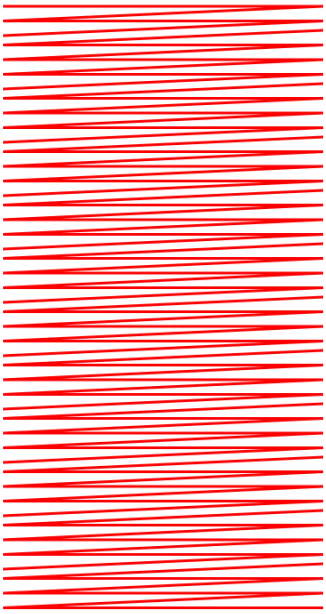

Fabric back

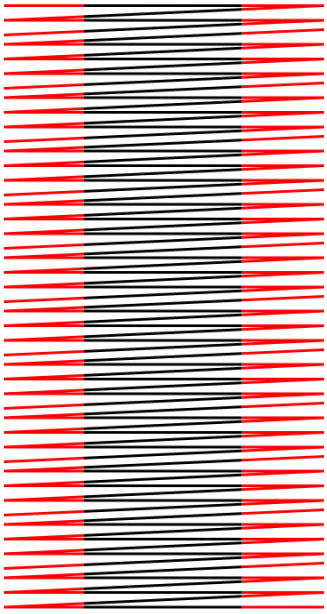

● Red is upper thread

● Black is bottom thread

⚠ Tips:

If the upper thread tension is not set correctly, it will lead to poor embroidery effect, thread jamming, thread breakage and needle breakage.

Get PDF manual from poolinstore.com

Upper Thread Tension Adjustment

Incorrect Tension Display Diagram

Fabric front

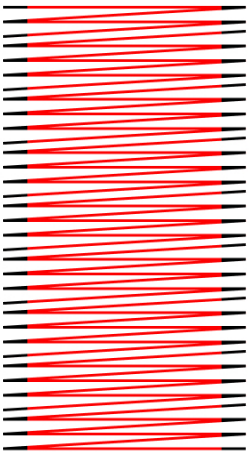

Fabric back

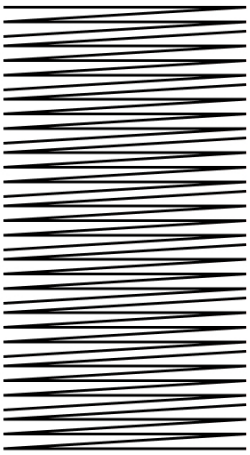

Upper thread too tight

If the tension of the upper thread is too tight, the bottom thread will be visible from the front of the fabric.

Adjustment Steps:

Tap the "–" button on the screen to reduce the value and loosen the thread tension.

Fabric front

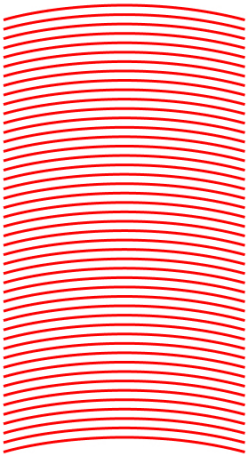

Fabric back

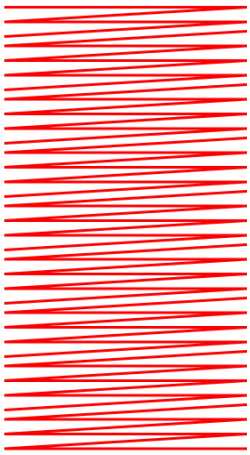

Upper thread too loose

If the tension of the upper thread is too loose, the floating thread can be seen from the front of the fabric, and the bottom thread can hardly be seen from the reverse side.

Adjustment Steps:

Tap the "+" button on the screen to increase the value and tighten the thread tension.

⚠ Tips:

1. The higher the value, the greater the tension.
2. Please adjust the tension according to different fabrics and designs. For most fabrics, the tension value is usually between 15 and 24.

Get PDF manual from poolinstore.com

Pattern Selection Page Introduction

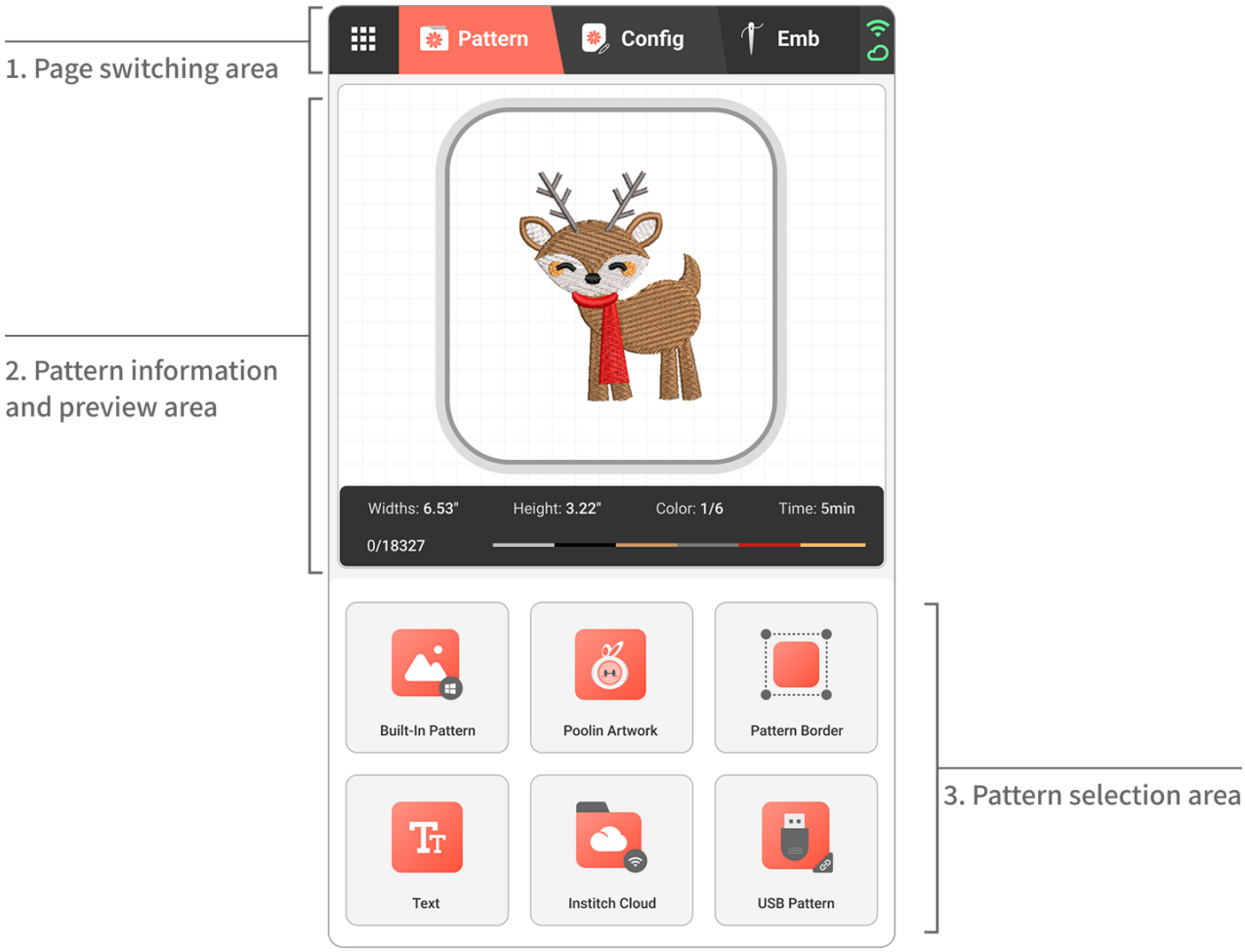

1、Page switching area

Contents	Description
	Set page.
Pattern	Pattern selection page.
Config	Pattern editing page. You cannot enter this page without selecting a pattern.
Emb	Embroidery status page. You cannot enter this page without selecting a pattern.

Get PDF manual from poolinstore.com

Pattern Selection Page Introduction

Contents	Description
	Wi-Fi Signal Status & Pattern Sync Switch • Strong Wi-Fi signal; pattern sync is enabled • Good Wi-Fi signal; pattern sync is enabled • Weak Wi-Fi signal; pattern sync is enabled • Strong Wi-Fi signal; pattern sync is disabled

2. Pattern information and preview area

Contents	Description
	Display the position of the pattern in the selection frame. Displays the actual position of the pattern within the current embroidery frame.
	If the pattern exceeds the frame area, the preview zone will show a red gradient as a warning, prompting the user to make adjustments.
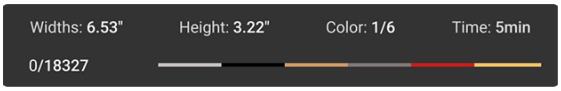	Displays basic pattern information (such as size, stitch count, etc.) and the embroidery sequence.

3. Pattern Selection Area

Contents	Description
	Built-in Patterns

Get PDF manual from poolinstore.com

Pattern Selection Page Introduction

Contents	Description
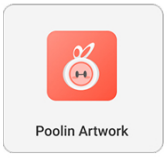	Built-in Poolin IP Characters
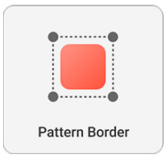	Built-in Lace Patterns
	Custom Letter Embroidery Use the built-in keyboard to enter text and generate embroidery patterns instantly.
	Institch Cloud Folder Once the device is bound and transmission is complete, patterns in this folder will automatically sync to the Institch Cloud Platform.
	USB Patterns 1. After inserting a USB drive, the system will automatically detect compatible pattern files. You can select and start embroidering immediately—no download required. 2. Tap the “Select” button to batch select multiple patterns and import them to the device.

Get PDF manual from poolinstore.com

Letter Embroidery

Description of Functions

Contents	Description
Language: ◀ ÀÃÇ ▶ Font: ◀ ÀÃÇ ▶	Font Selection Panel • Language: 8 built-in artistic fonts • Characters: A–Z, a–z, numbers, symbols, Latin letters
L M S	Adjust Letter Size
Config	Letter Edit Shortcut Tap to enter editing for style adjustments.

Get PDF manual from poolinstore.com

Institch Cloud Folder

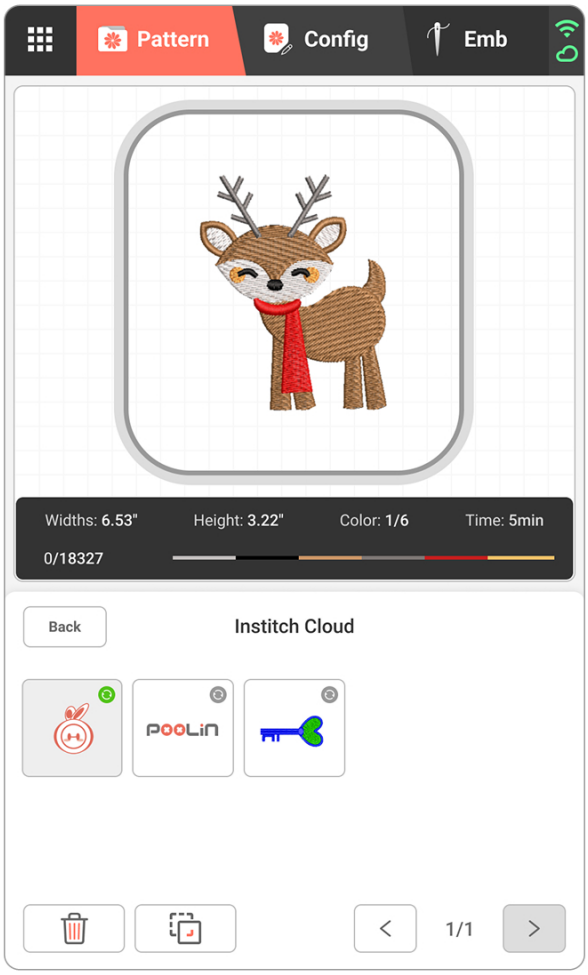

Description of Functions

Contents	Description
	Delete Button Tap to select and delete multiple patterns.
	Combine Button Up to 8 patterns can be combined.
< 1/9 >	Pattern List Pagination
	Cloud Sync Status Green: Synced to cloud Gray: Not synced

Get PDF manual from poolinstore.com

Import Patterns from USB to Machine

1. If a "USB not detected" message appears during import, please unplug and reinsert the USB or try a different USB device, then re-import.
2. The USB storage capacity must be less than 64GB and formatted as FAT32.
3. Do not remove the USB before the import is complete to avoid data loss.
4. This machine supports pattern files in DST/DSB formats. Other formats need to be converted using design software.

1 Insert the USB drive.

2 Tap USB Pattern.

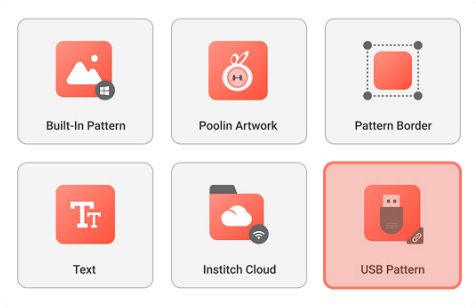

3 Tap the Select button.

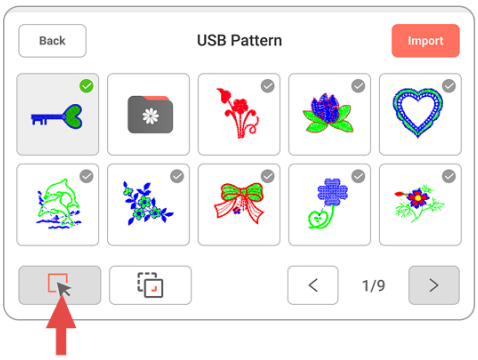

4 Choose the patterns you want to import, then tap Import.

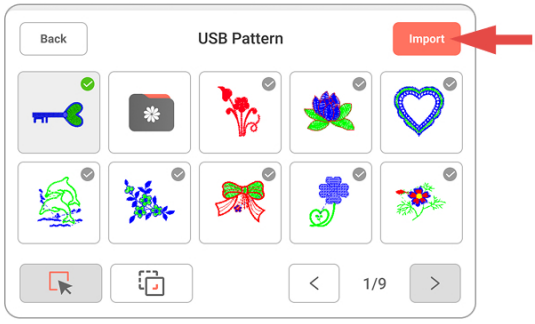

5 Tap the Back button, then tap Institch Cloud.

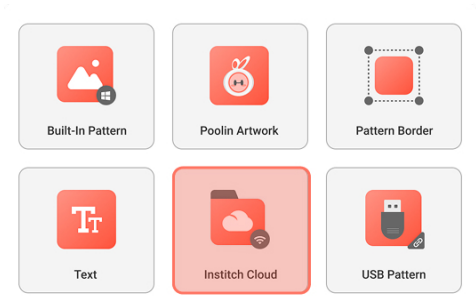

6 Imported patterns will appear in the Institch Cloud folder.

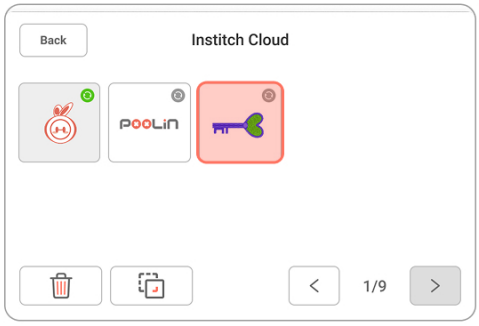

Direct Embroidery from Patterns on USB

1. The USB storage capacity must be less than 64GB and formatted as FAT32.
2. This machine supports pattern files in DST/DSB formats. Other formats need to be converted using design software.

1 Insert the USB drive.

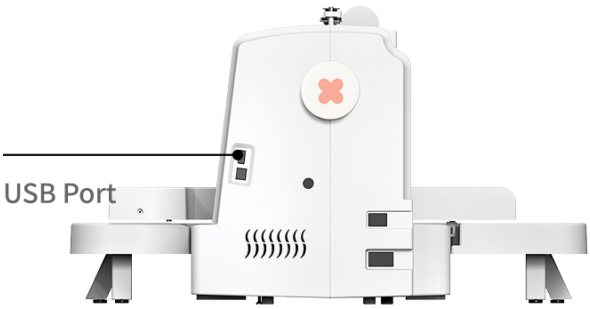

2 Tap USB Pattern.

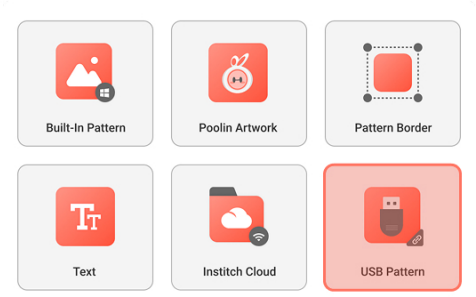

3 Select the pattern(s) you want to embroider.

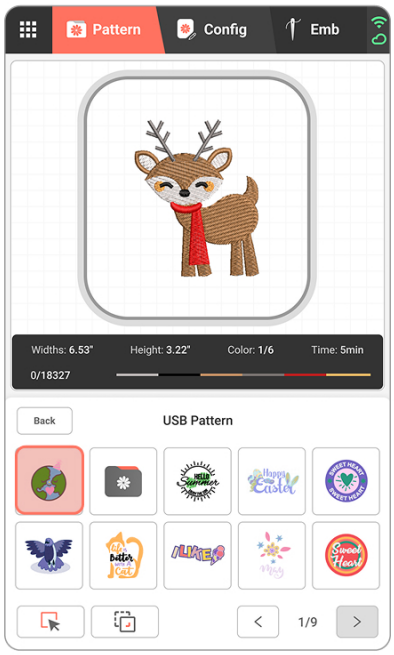

4 Tap the Back button.

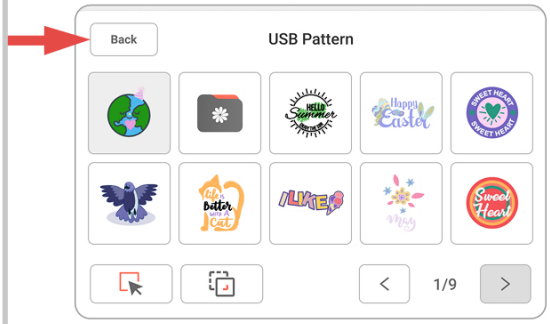

Get PDF manual from poolinstore.com

Combine Multiple Patterns for Emb

1 Tap the Multi-Select button, then choose the patterns to combine.

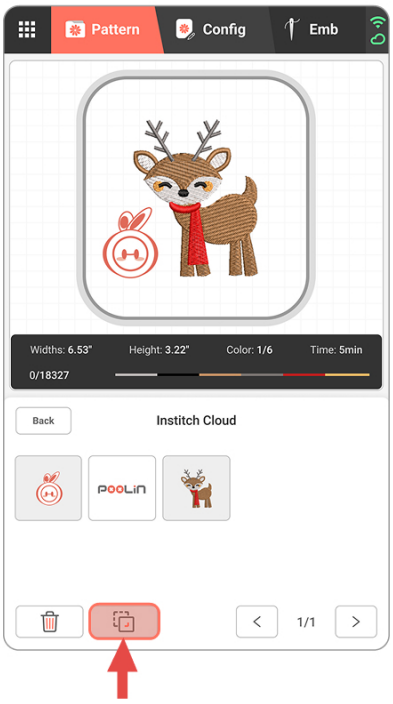

Tips:

- You can combine up to 8 patterns.
- Supported sources include built-in patterns, Institch Cloud, letter patterns, and custom USB-imported patterns.

2 After selection, tap the Edit button.

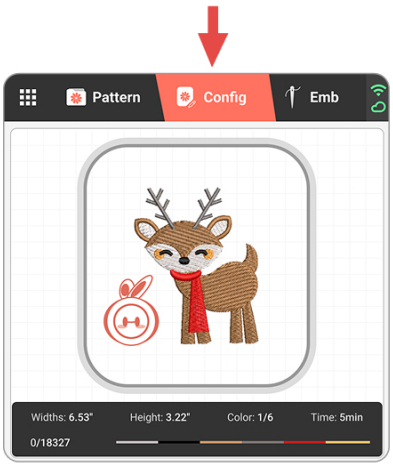

3 Use the left/right arrow keys to switch between patterns, edit them individually, or switch to Edit All mode.

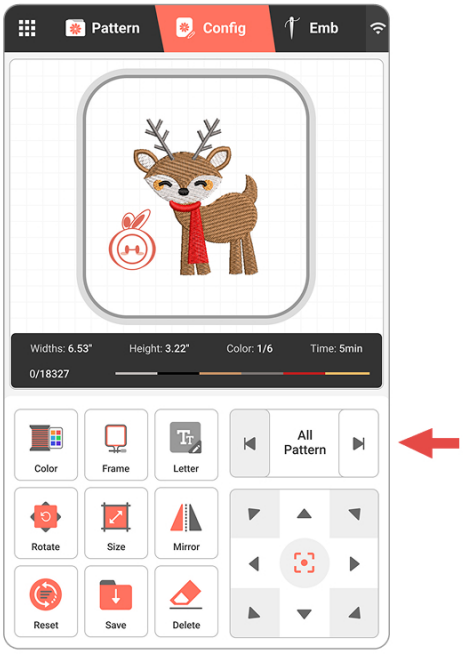

4 To save the combined pattern, tap the Save button. It will be stored in the Institch Cloud folder.

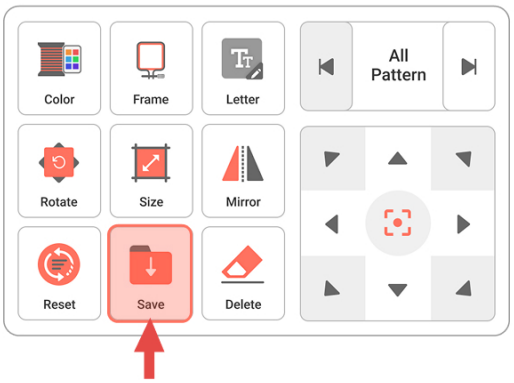

Get PDF manual from poolinstore.com

Pattern Editing Page Introduction

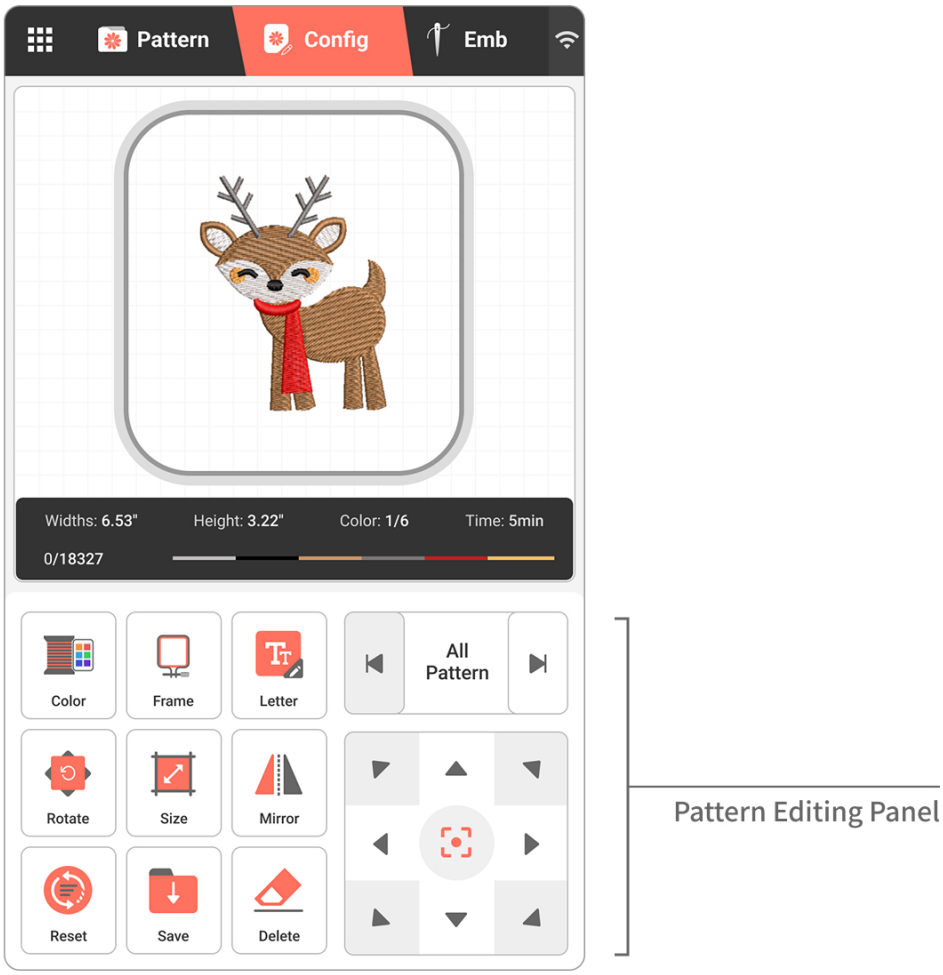

Pattern Editing Panel

Contents	Description
Color	Color setting page.
Frame	Embroidery frame selecting page.
Rotate	Pattern rotating page.

Get PDF manual from poolinstore.com

Pattern Editing Page Introduction

Contents	Description
Size	Resize Design Page
Mirror	Mirror Pattern Page
Reset	Reset Edited Pattern After tapping the Reset button, the selected pattern will be cleared.
Save	Save Edited Pattern After tapping the Save button, a new pattern will be generated in Institch Cloud.
Delete	Delete Edited Pattern After tapping the Delete button, the currently selected pattern will be deleted. In combination mode, use the left and right switch keys to select the pattern to delete.
Letter Letter	Edit Letter Pattern This button is only available when a letter pattern is selected.
All Pattern	Select Combined Pattern 1. Use the left/right arrow buttons to switch between group selection and single selection. 2. This function is disabled when only one pattern is selected.
	Move Pattern Within Frame Center: Move the pattern to the center of the display. Top Left: Move the pattern to the top-left of the display. Top Right: Move the pattern to the top-right of the display. Bottom Left: Move the pattern to the bottom-left of the display. Bottom Right: Move the pattern to the bottom-right of the display.

Get PDF manual from poolinstore.com

Set Pattern Colors

1 Select a pattern and tap Config.

Note: You must select at least one pattern before entering the editing page.

2 Tap Color.

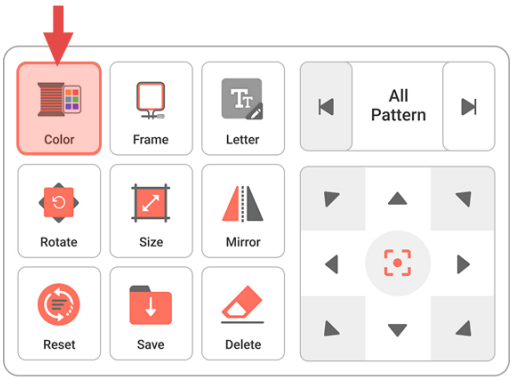

3 Choose a layer, then tap the color block on the right to fill it. The color will update in real time in the Pattern Info area.

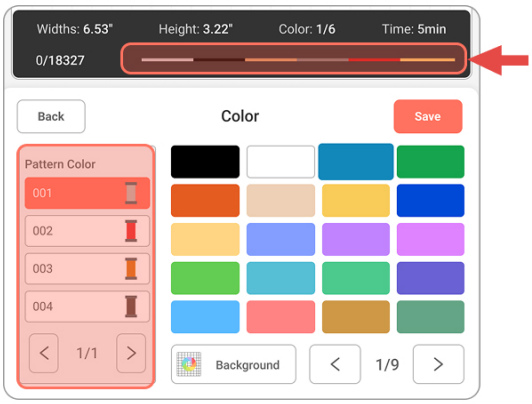

4 After adjusting, tap Save to apply the changes.

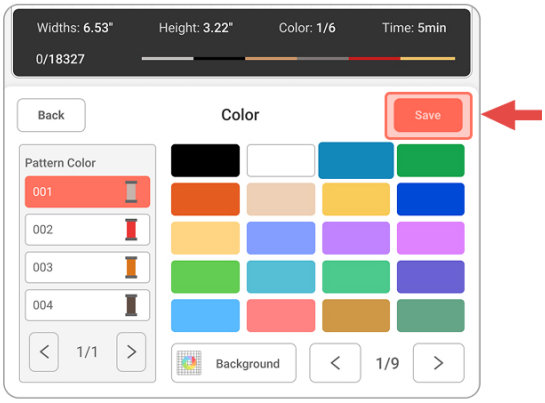

Tips:

If you're not satisfied with the selected colors, tap Back to discard changes.

Get PDF manual from poolinstore.com

Set Preview Background Color

1 Select a pattern and tap Config.

Note: You must select at least one pattern before entering the editing page.

2 Tap Color.

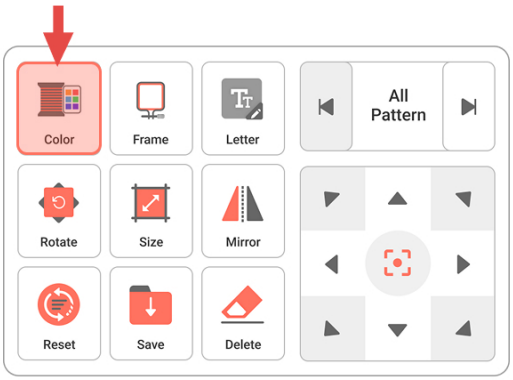

3 Tap Background, then tap the color block on the right to fill it. The preview area will update in real time.

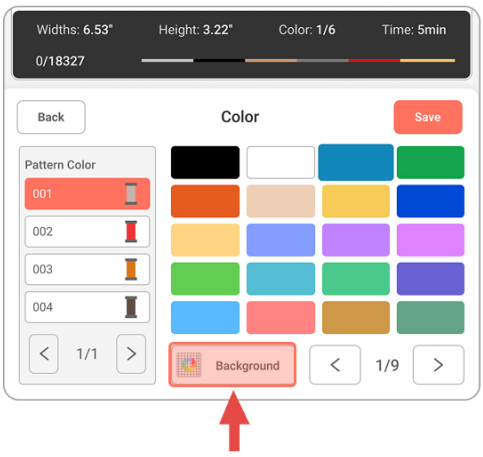

4 After adjusting, tap Save to apply the changes.

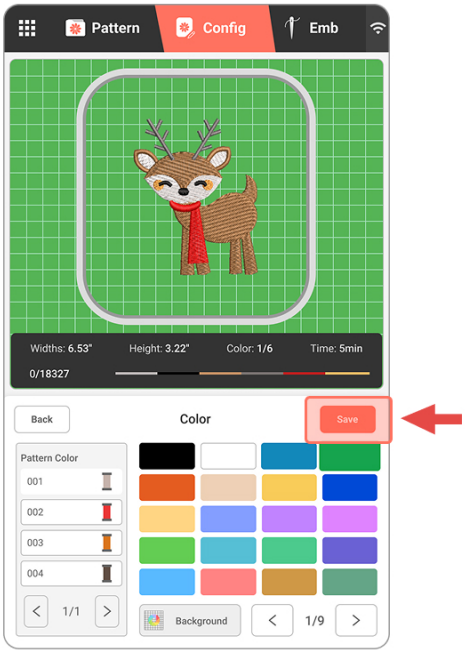

Tips:

If you're not satisfied with the selected background color, tap Back to discard changes.

Get PDF manual from poolinstore.com

Select Embroidery Frame

Note:The attached embroidery frame must match the corresponding embroidery frame displayed on the screen, otherwise the frame collision may occur, resulting in damage to the machine.

1 Select a pattern and tap Config.

Note: You must select at least one pattern before entering the editing page.

2 Tap Frame.

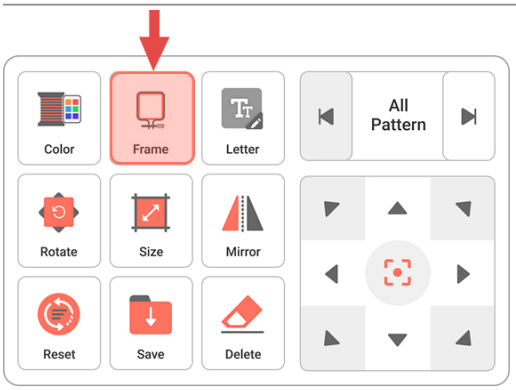

3 Choose the Appropriate Embroidery Frame

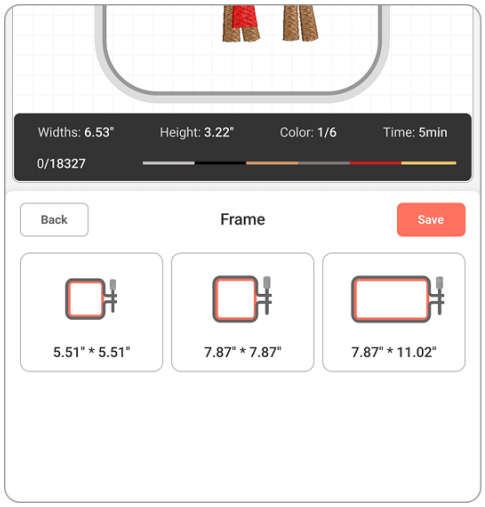

4 After adjusting, tap Save to apply the changes.

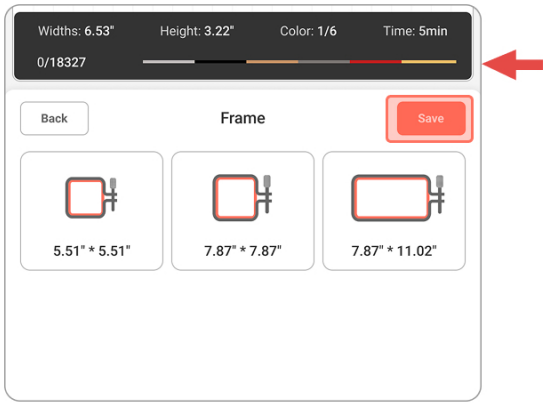

Tips:

When selecting a frame, the machine will automatically move to its origin position. Make sure there are no objects nearby to avoid collisions or damage.

Tips:

Ensure the embroidery area of the selected frame is larger than the pattern size.

Get PDF manual from poolinstore.com

Letter Editing

Description of Functions

Contents	Description
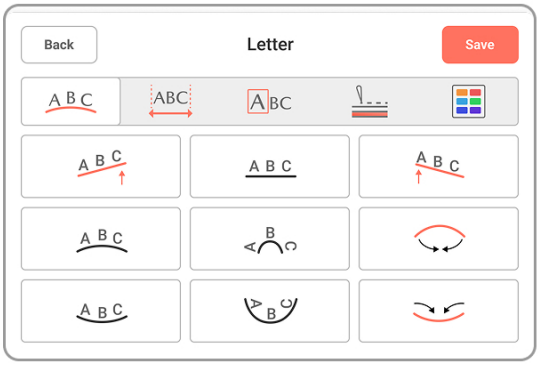	We offer commonly used text distortion effects to help you quickly create fun and unique styles: 1. Arch Up: Text curves upward like a rainbow. 2. Arch Down: Text curves downward, ideal for bottom arcs. 3. Italic: Slants the text for a dynamic look.

Get PDF manual from poolinstore.com

Letter Editing

Contents	Description
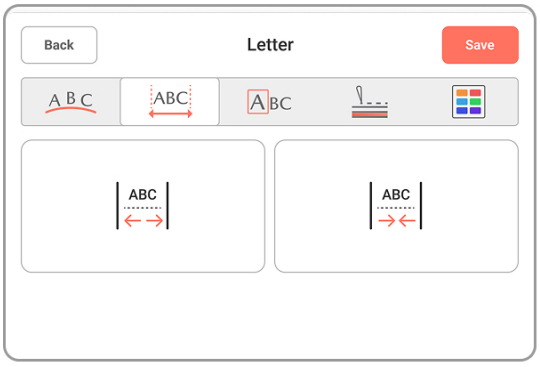	Adjust the spacing between letters freely.
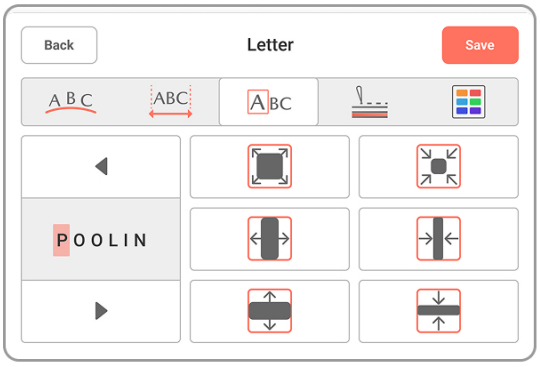	Select a letter and adjust its size independently.
	Freely adjust the distance between characters (range: 0.4–1.2). The smaller the number = the denser the stitches;The larger the number = the sparser the stitches.
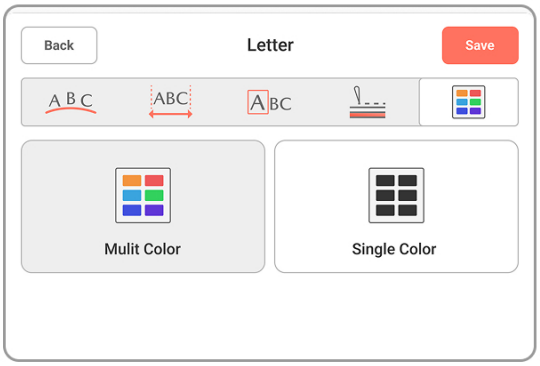	Color Mode Switch: Single Color: All letters use the same color. Multi-Color: Assign different colors to each letter.

Get PDF manual from poolinstore.com

Rotate Pattern

Note: Only edits within the frame range can be saved successfully, please pay attention to the border line of the frame in the preview area.

1 Select a pattern and tap Config.

Note: You must select at least one pattern before entering the editing page.

2 Tap Rotate.

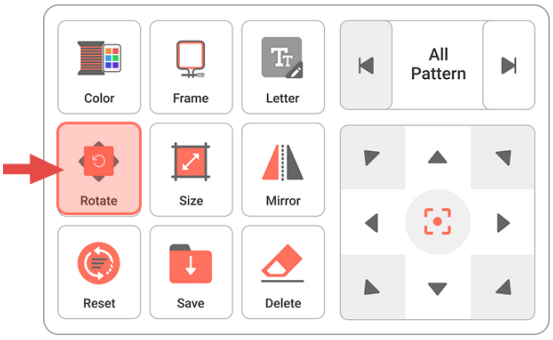

3 Rotate the pattern.

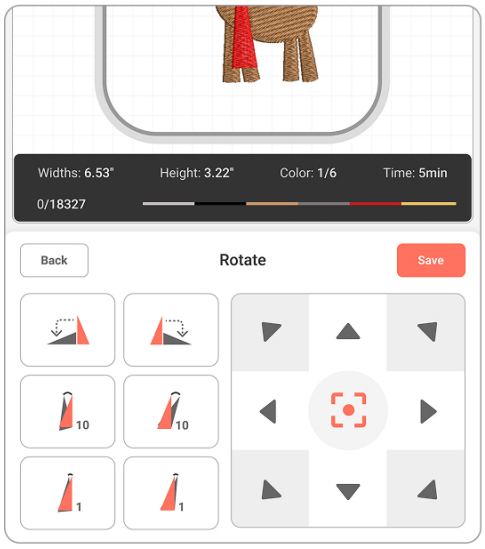

Rotate the pattern counterclockwise 90 degrees.

Rotate the pattern clockwise 90 degrees.

Rotate the pattern counterclockwise 10 degrees.

Rotate the pattern clockwise 10 degrees.

Rotate the pattern counterclockwise 1 degree.

Rotate the pattern clockwise 1 degree.

4 After adjusting, tap Save to apply the changes.

Get PDF manual from poolinstore.com

Scale Pattern

Note: Only edits within the frame range can be saved successfully, please pay attention to the border line of the frame in the preview area.

1 Select a pattern and tap Config.

Note: You must select at least one pattern before entering the editing page.

2 Tap Size.

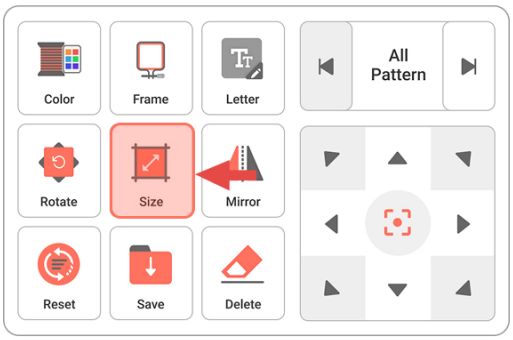

3 Adjusting Pattern Size.

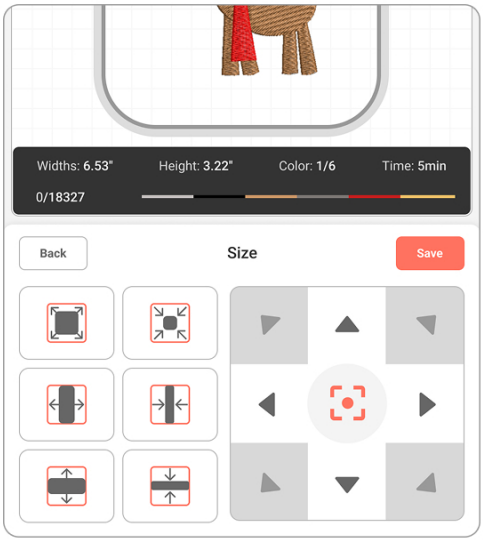

The pattern is enlarged along the center point.

The pattern is shrinks along the center point.

The pattern is enlarged along the X direction.

The pattern shrinks along the X direction.

The pattern is enlarged along the Y direction.

The pattern shrinks along the Y direction.

4 After adjusting, tap Save to apply the changes.

Get PDF manual from poolinstore.com

Mirror Pattern

Note: Only edits within the frame range can be saved successfully, please pay attention to the border line of the frame in the preview area.

1 Select a pattern and tap Config.

Note: You must select at least one pattern before entering the editing page.

2 Tap Mirror.

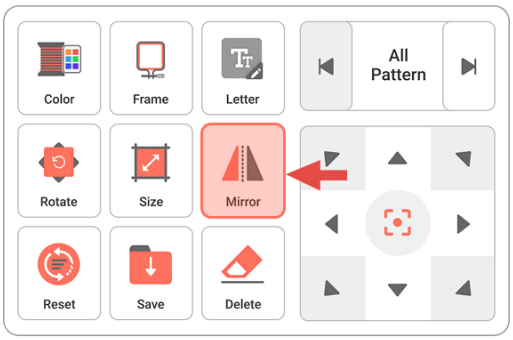

3 Mirror the pattern.

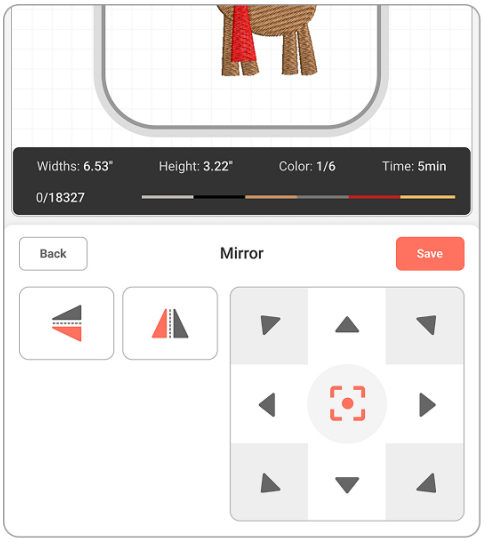

Flip Vertically

Flip Horizontally

4 After adjusting, tap Save to apply the changes.

Get PDF manual from poolinstore.com

Reset Edited Pattern

Note: Only edits within the frame range can be saved successfully, please pay attention to the border line of the frame in the preview area.

1 Click the Reset button.

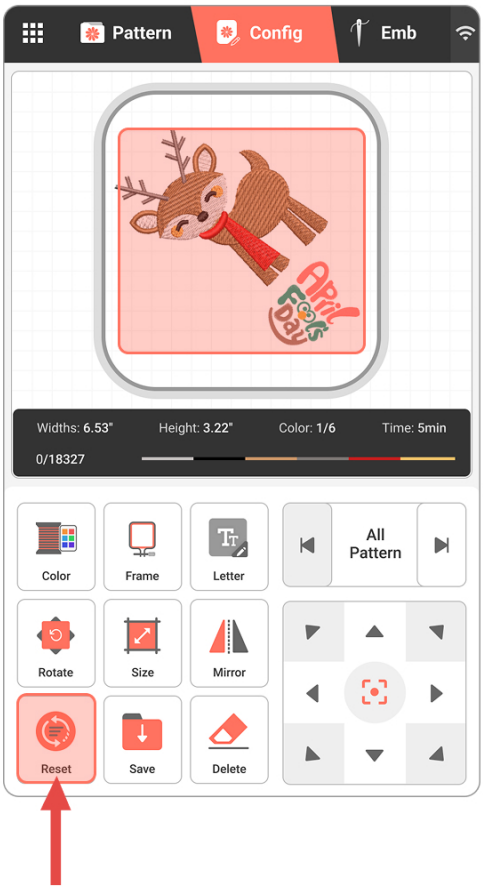

2 The pattern will be restored to its initial state.

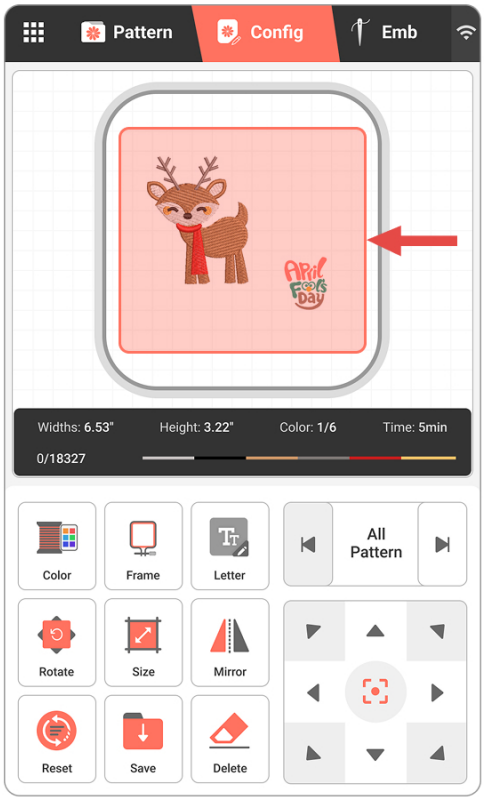

Get PDF manual from poolinstore.com

Save Edited Pattern

Note: Only edits within the frame range can be saved successfully, please pay attention to the border line of the frame in the preview area.

1 Tap the Save button to store the current pattern.

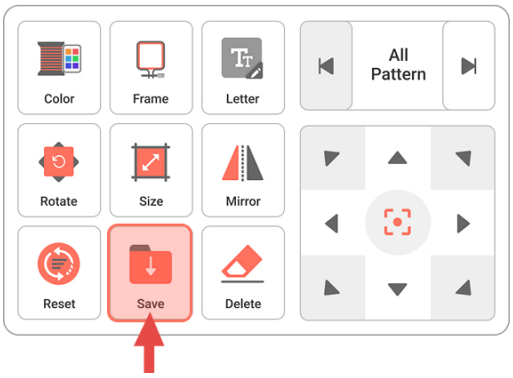

2 Tap the Pattern button.

3 Tap the Institch Cloud folder.

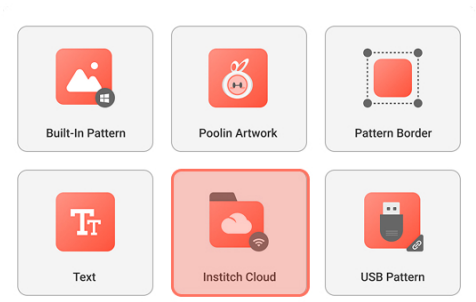

4 Patterns saved to the device will be listed here.

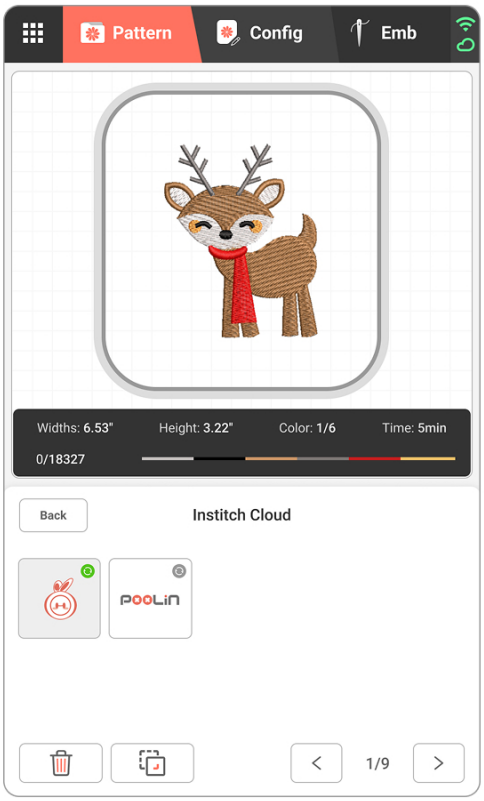

Get PDF manual from poolinstore.com

Delete Edited Pattern

Note: Only edits within the frame range can be saved successfully, please pay attention to the border line of the frame in the preview area.

1 Click the Delete button.

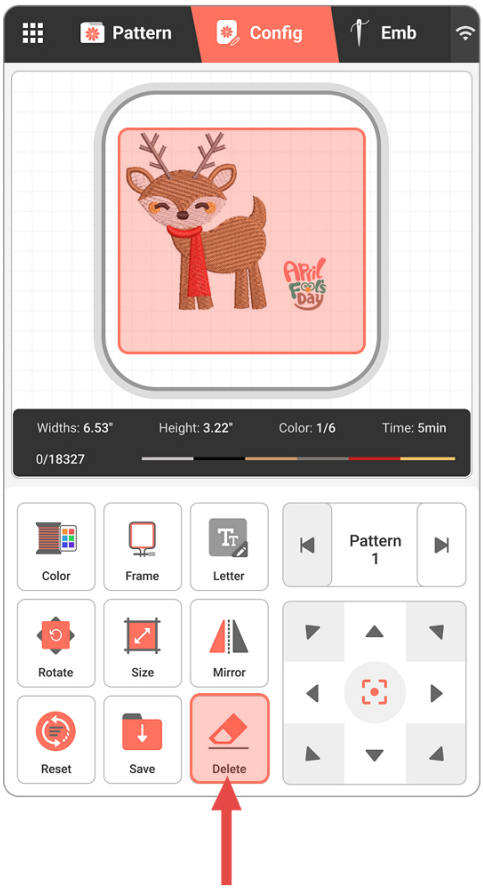

2 The pattern will be deleted.

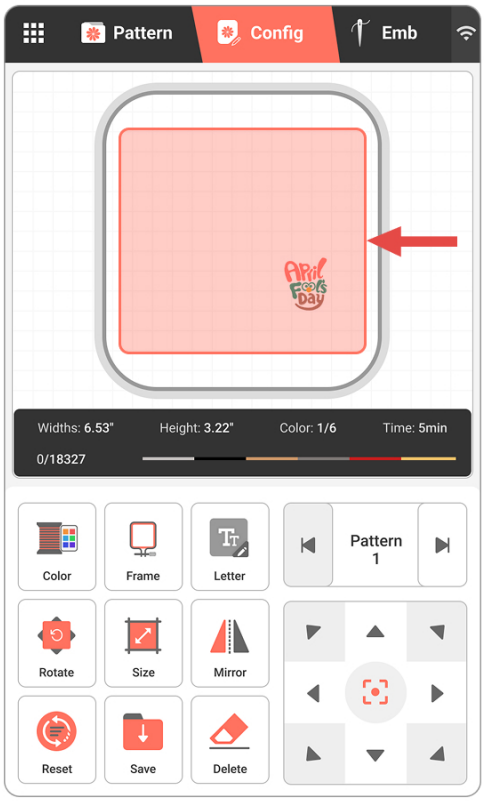

Get PDF manual from poolinstore.com

Pattern Embroidery Page Introduction

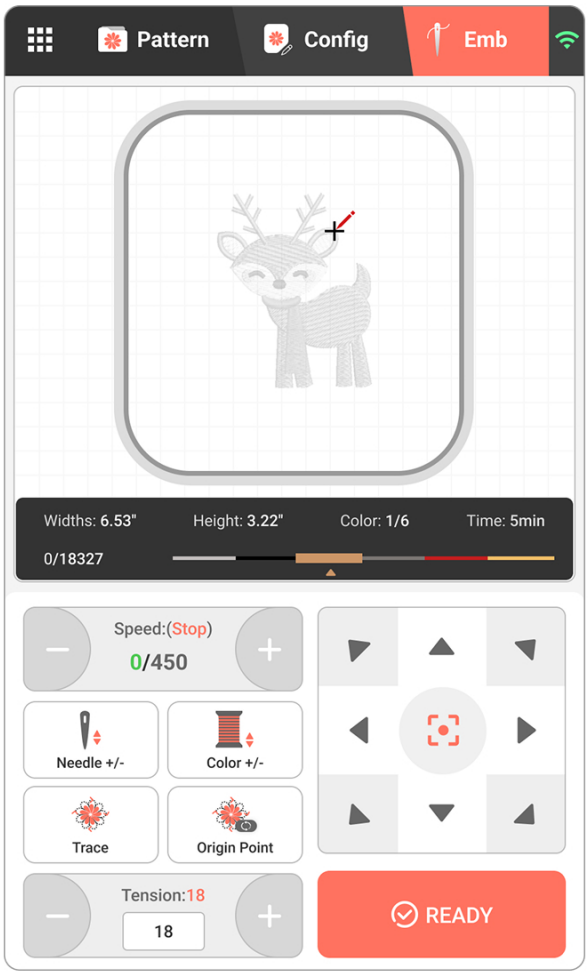

Description of Functions

Contents	Description
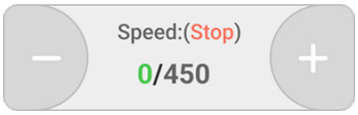	Real-time embroidery speed/maximum embroidery speed.There are 6 status： 1. Wait 2. Ready 3. Working 4. Pause 5. Thread Broken 6. Complete

Get PDF manual from poolinstore.com

Pattern Embroidery Page Introduction

Contents	Description
Speed:(Stop) 0/450	Slow Down / Speed Up
Needle +/-	Forward/backward by the number of stitches.
Color +/-	Forward/backward by color.
Trace	Pattern tracing: before embroidery starts, trac e along the largest edge of the pattern, it is used to determine the embroidery position of the pattern in the embroidery.
Origin Point	Return to the starting point: Return to the starting point during the embroidery to restart embroidery. In the state of embroidery, perform the operation of returning to the starting point to stop embroidery and return to the starting point, please select as required.
Tension:18 18	Electronic Tension Adjustment Adjust the thread tension during embroidery by tapping the buttons. Note: Tension can only be adjusted while the machine is running.
READY EXIT	Working state switching key（READY/EXIT）. Press the key to switch： • READY : indicates the ready state, the selection of pattern must be in ready. • EXIT : means to enter the working state, only in this state can start embroidery.

Get PDF manual from poolinstore.com

Stitch Forward/Backward

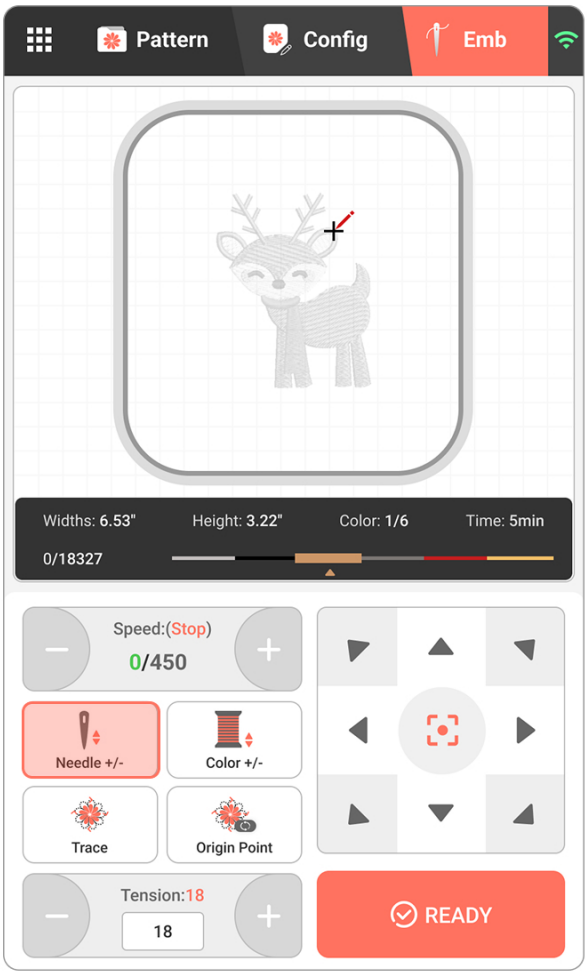

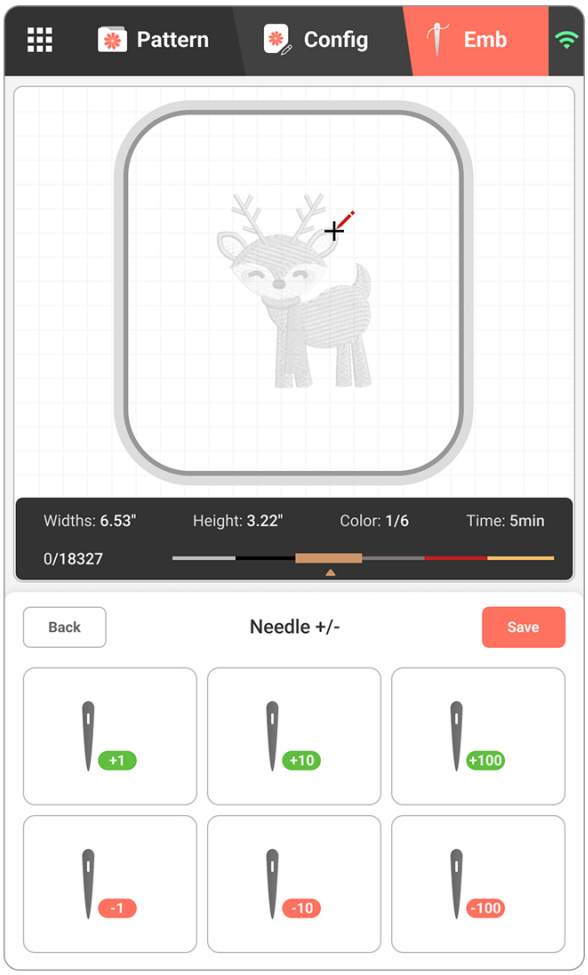

Description of Functions

Contents	Description
	Forward 1 stitch. Press the key，the pattern will move forward 1 stitch.
	Forward 10 stitches. Press the key，the pattern will move forward 10 stitches.

Get PDF manual from poolinstore.com

Stitch Forward/Backward

Contents	Description
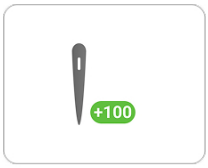	Forward 100 stitch. Press the key，the pattern will move forward 100 stitches.
	Back 1 stitch. Press the key，the pattern will move backward 1 stitch.
	Back 10 stitches. Press the key，the pattern will move backward 10 stitches.
	Back 100 stitches. Press the key，the pattern will move backward 100 stitches.

Get PDF manual from poolinstore.com

Color Forward/Backward

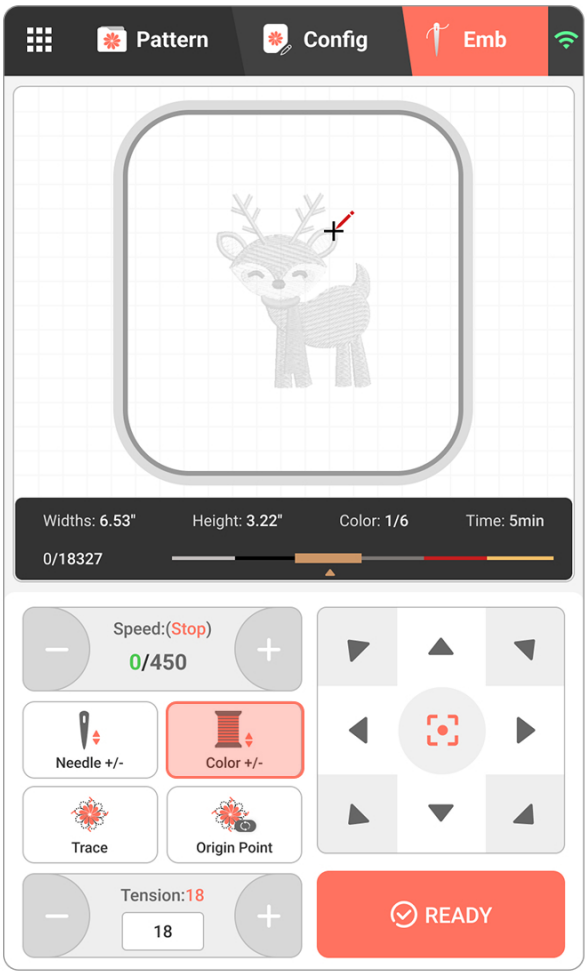

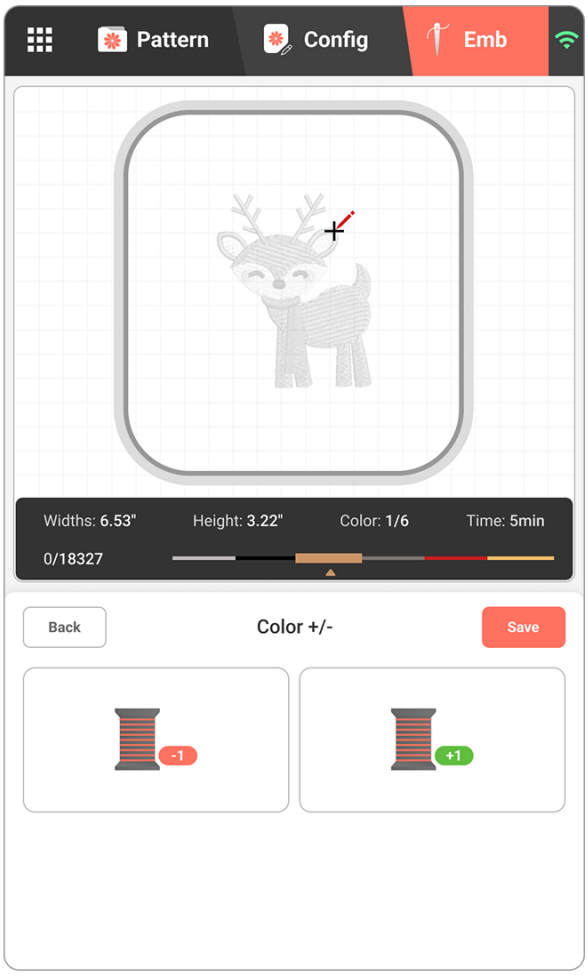

Description of Functions

Contents	Description
	Forward color key. Press the key, the pattern will go forward 1 color.
	Back color key. Press the key, the pattern will go backward 1 color.

Get PDF manual from poolinstore.com

Settings Main Page Introduction

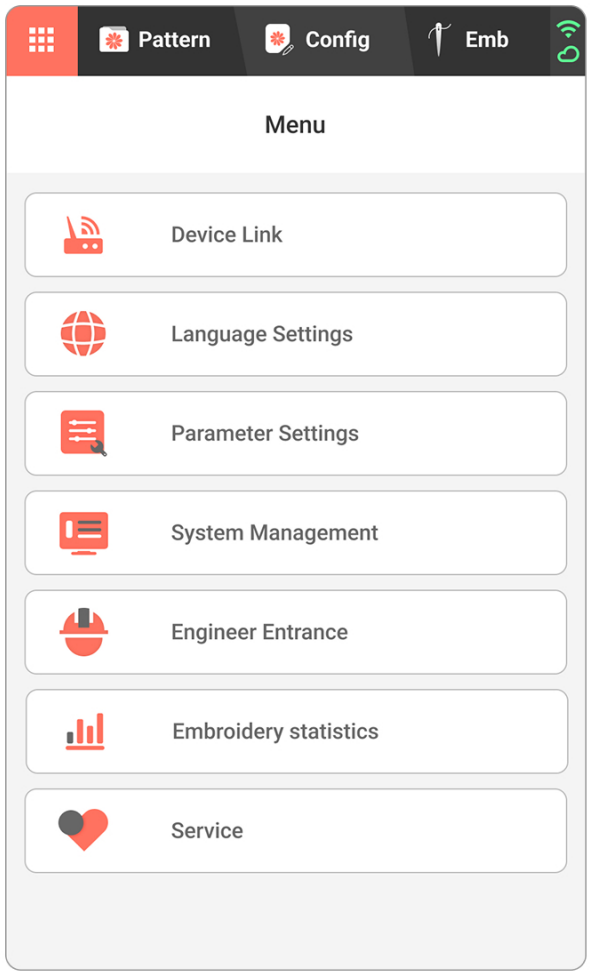

Description of Functions

Contents	Description
Device Link	Device link Page
Language Settings	Language Settings
Parameter Settings	Parameter Settings

Get PDF manual from poolinstore.com

Settings Main Page Introduction

Contents	Description
System Management	System Management
Engineer Entrance	Engineer Entrance
Embroidery statistics	Embroidery Statistics
Service	Service

Get PDF manual from poolinstore.com

Common Issues and Solutions

Error Message	Cause of Issue	Solution
Thread breaking	The upper thread is threaded incorrectly.	Follow the operation of threading the upper thread, re-thread the thread.
	Upper thread tension is too tight.	Adjust tension.
	Thread jammed.	Clean up the jam.
	Thread doesn't fit the needle.	Use proper needle and thread.
	Bobbin case scratches.	Replace the bobbin case.
	The needle is not installed correctly.	Correctly install the needle.
Needle breaking	Upper thread tension is too tight.	Adjust tension.
	Thread jammed.	Clean up the jam.
	Needle doesn't fit the fabric.	Use a larger needle.
	The needle is not installed correctly.	Correctly install the needle.
Thread jammed	The upper thread is threaded incorrectly	Follow the operation of threading the upper thread, re-thread the thread.
	Upper thread tension is too loose	Adjust tension.
Stitches skipped	Needle doesn't fit.	Use the proper needle.
	Needle bending.	Replace the needle.

Get PDF manual from poolinstore.com

Common Issues and Solutions

Error Message	Cause of Issue	Solution
Stitches skipped	The needle is not installed correctly.	Replace the needle.
	Upper thread tension is too tight.	Adjust tension.
Misplaced embroidery	Fabric unclamped.	Clamp the fabric.
	No stabilizer.	Add stabilizer.
	When the embroidery frame is working, it bumps to the surrounding objects.	Do not place any objects around the embroidery frame.
Thread unlocked	The upper thread is threaded incorrectly.	Follow the operation of threading the upper thread, re-thread the thread.
	No bobbin.	Reinstall the bobbin.
	The thread does not fit the needle.	Use proper needle and thread.
USB not recognized	The USB format does not matchor or the memory is too large	Please use the offered USB device or purchase a USB device with a capacity of less than 64GB and a format of FAT32.
Pattern not recognized	Pattern format is incorrect	This machine only supports pattern files in DSB/DST format.

Get PDF manual from poolinstore.com

More Stitch More Love
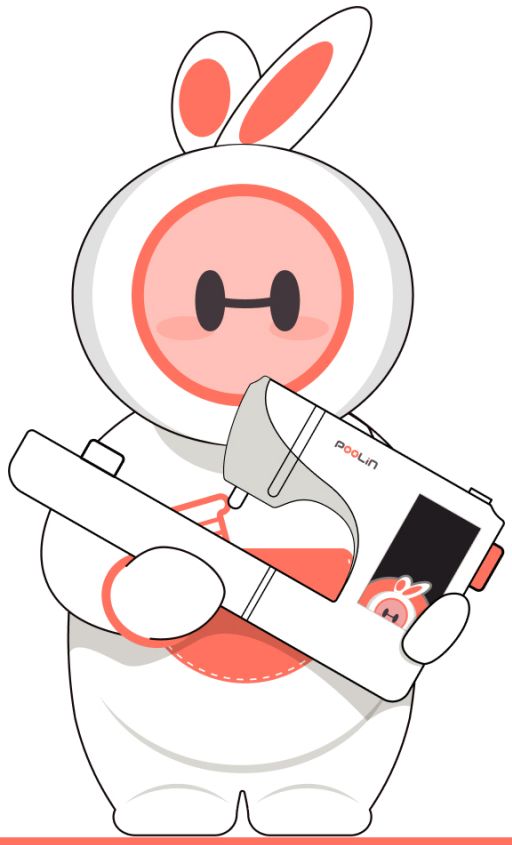
whatsApp *Facebook* *YouTube*